Model : KTE-1000MOH

Heating Pump Modular System Training Kit

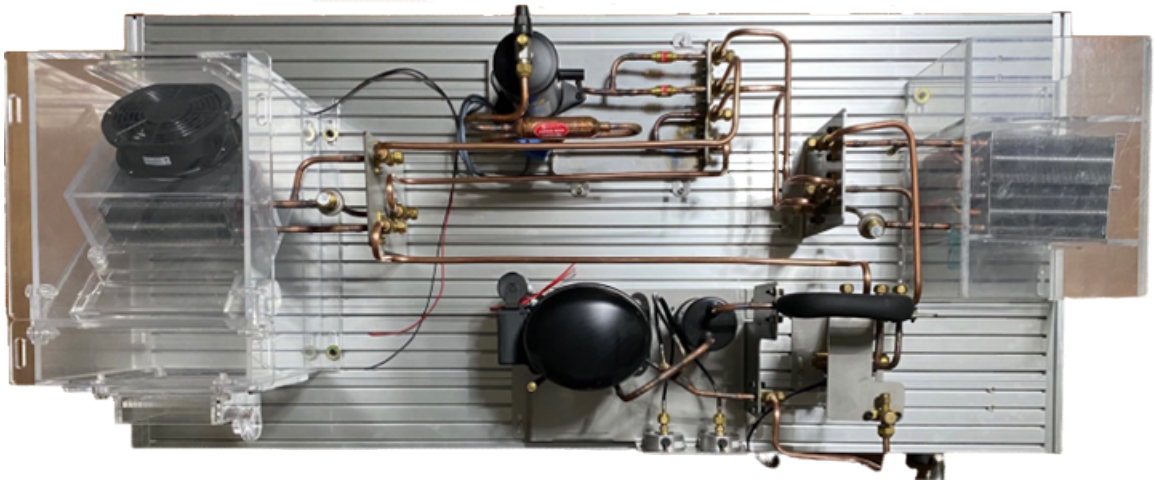

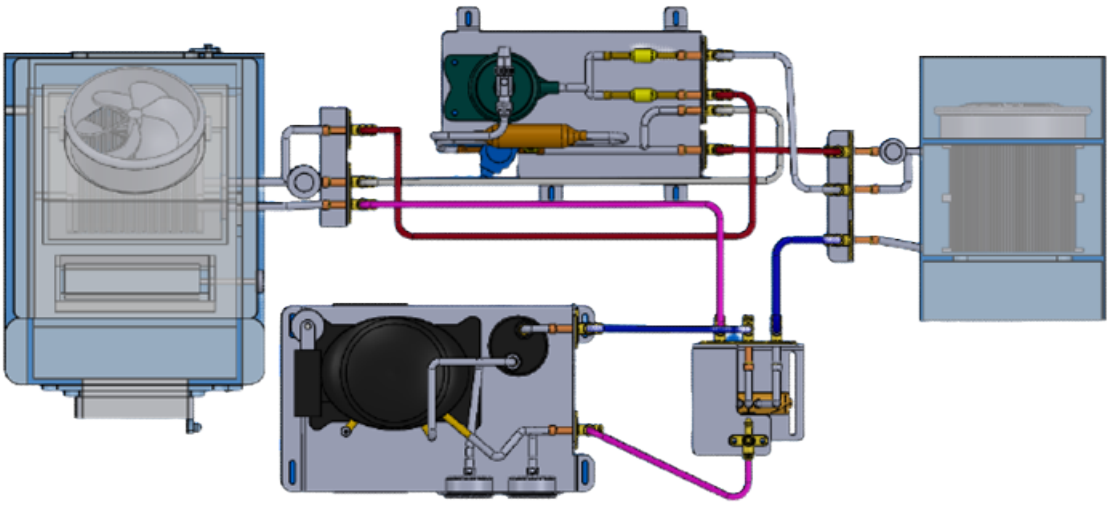

KTENG CORPORATION

Korea Technology Institute of Energy Convergence

Korea Technology Engineering Co.,Ltd.

CONTENT

Chapter 1. Description of an Heat pump cooling & heating apparatus

1. Heat Pump Refrigeration Experiment Equipment

1-1. A General Outline

The heat pump installation modular education system is an education system that acquires facility composition capabilities by modularizing and installing parts of cold and hot heat source devices such as steam compression refrigeration, ice heat storage facilities, GHP, EHP, and system air conditioners.

This training system organizes a steam-compressed refrigeration cycle to understand changes in the system due to the conversion of heating and cooling through the operation of four-way valves as well as the installation practice of the refrigeration system and various basic refrigeration sequences.

The refrigeration system expander may arbitrarily change the evaporation pressure during operation by attaching and adjusting the manual expansion valve. Based on the theoretical refrigeration cycle centered on textbooks (theoretical education), performance can be verified and compared in the actual reference refrigeration cycle by operating various variables such as condensation temperature variable (condensation pressure variable), evaporation temperature variable (evaporation pressure variable), overheating compression, wet compression, dry saturated compression, and supercooling.

The automatic control device allows you to experience the basic practice of various controls that must be passed on in science and engineering, including the refrigeration system, and the practice necessary for the performance and adjustment of the device. In addition, various controllers are used to experience the basic circuit configuration required for standard refrigeration cycle operation to experiment and practice real wiring configuration operation in a short time, thereby providing understanding and practical skills of automatic control circuits in complex refrigeration systems.

In particular, it is an educational system that can learn a sense of practice and improve adaptability to the field by installing an operation system in a heat pump-type cooling and heater used in commercial products or industrial industries using a small laboratory-level system.

1-2. Mechanical refrigeration device component

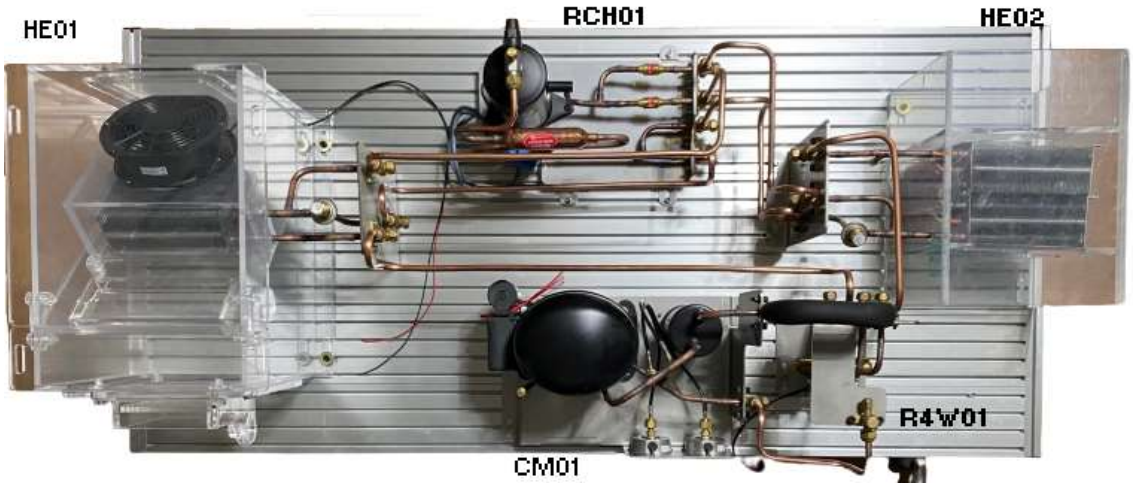

① CM01 : Compressor Module

② HE01 : Evaporator Module

③ HE02 : Condenser Module

④ RCH01 : Liquid Receiver Module

⑤ R4W01 : 4-Way Valve Module

1-3. Heat pump system practice module

: ① Heating System

Compressor Module(CM01) -> 4 Way Valve(R4W01) -> Evaporator Module(HE01) -> Check valve -> Liquid Receiver Module (RCH01) -> Filter dryer -> Sight glass -> Solenoid valve -> Pressurizing -> Condenser Module (HE02) -> Liquid separator -> Compressor Module(CM01)

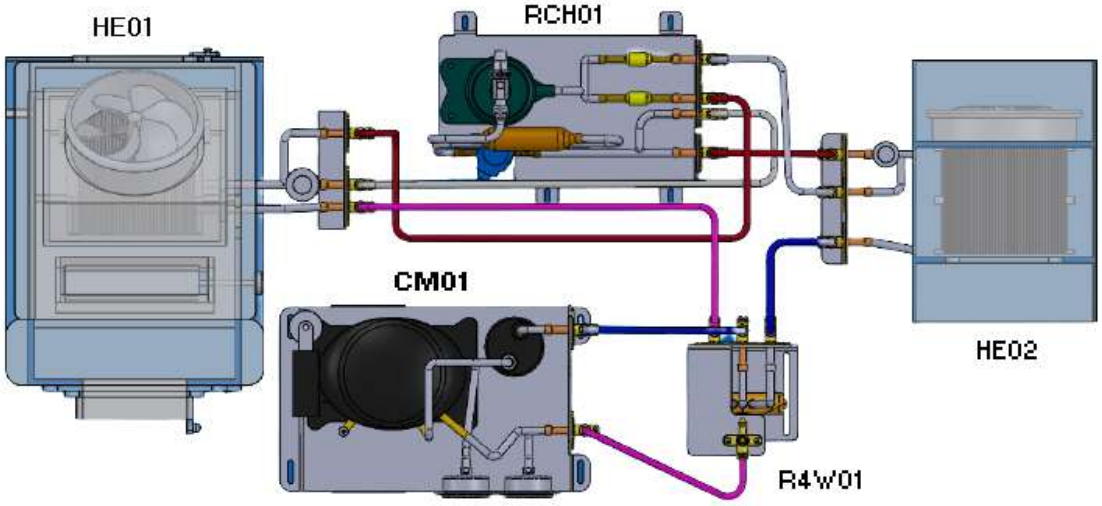

② Cooling System

Compressor Module(CM01) -> 4 Way Valve(R4W01) -> Condenser Module (HE02) -> Check valve -> Liquid Receiver Module (RCH01) -> Filter dryer -> Sight glass -> Solenoid valve -> Pressurizing -> Evaporator Module(HE01) -> Liquid separator -> Compressor Module(CM01)

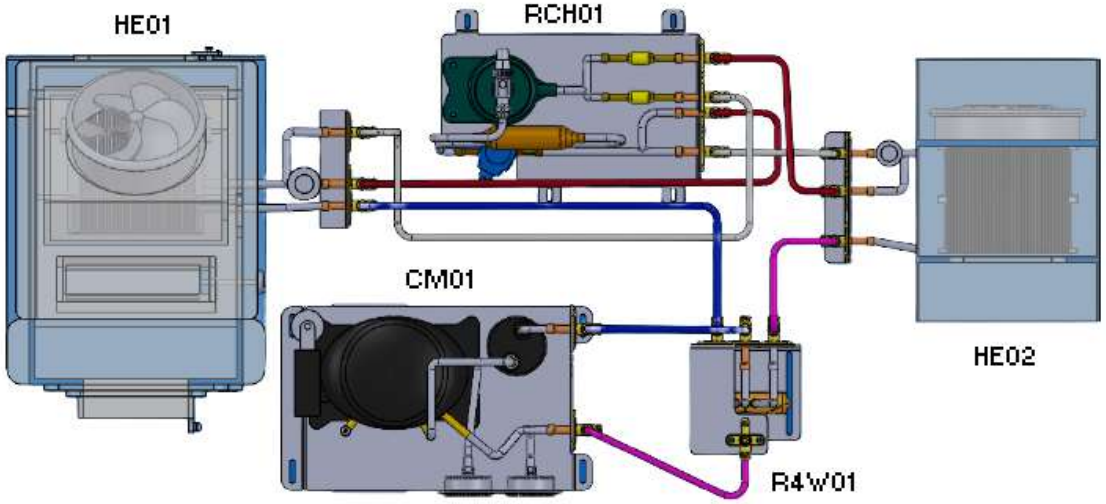

(1) Compressor Module Serial No: CM01

Compressor Module

CM0101: Stainless Steel Bracket
2T SUS Plate W440mm* D220mm* H250mm * 1EA
The stainless steel bracket is designed to connect the compressor, the low-high pressure gauge, the service valve and the compressor stand, the profile(3030) and the table, and practice the pipe connection with the flare nut.

CM0102: Stainless Steel Bracket fixed bolt
M6*18 * 4EA

CM0103: Compressor
Refrigerant 404a, 1/2 HP, Single 220V, 50/60 Hz * 1EA
The motor compressor absorbs heat from an object in the evaporator of the standard refrigeration test equipment, increases the pressure by compressing the vaporized gas refrigerant at low-temperature and low-pressure and reduces the distance between molecules. Then, it increases the temperature and thus makes the gas easily in the condenser at the room temperature. That is, it sends the heat from the evaporation of refrigerant at the low heat source(evaporator) to the superheat source(condenser) at the high temperature and pressure.

CM0104: Compressor fixed bolt
M6*36 * 4EA

CM0105: Details of Control Box
A starting capacitor 300vac, Connection line, PCB * 1SET

CM0106: Temperature Sensor of Compressor Inlet
Thermo-Couple K-Type 032q * 1EA

CM0107: Temperature Sensor of Compressor Outlet
Thermo-Couple K-Type 032q * 1EA

CM0108: Liquid Separator

1/2HP Circle Type, VERTICAL TYPE, Included SUS plate * 1EA
Test Pressure : 1.3MPa Capacity : 0.6L
Accumulators have been used for years on original equipment. More recently they have been field installed. The significance with respect to accumulator and system performance has never been clarified. Engineers have been forced to evaluate each model in terms of the system on which it is to be applied. Application in the field has been primarily based on choosing a model with fittings that will accommodate the suction line and be large enough to hold about half of the refrigerant charge.
There is no standard rating system for accumulators. The accuracy of rating data becomes a function of the type of equipment used to determine the ratings. Some data is now available to serve as a guide to those checking the use of an accumulator.

CM0109: Liquid Separator Fixed Bolt
M6*18 * 3EA

CM0110: Low-Pressure Gauge
Range : -1~35kgf/cm2 Included Bracket * 1EA

CM0111: High-Pressure Gauge
Range : -1~15kgf/cm2 Included Bracket * 1EA

CM0112: High-Pressure Sensor
5V Input to 0.5~4.5V Output, 8~30V Input 4~20mA, to 1~5V Output * 1EA
Range : -1~35kgf/cm2

CM0113: Low-Pressure Sensor
5V Input to 0.5~4.5V Output, 8~30V Input 4~20mA, to 1~5V Output * 1EA
Range : -1~35kgf/cm2

CM0114: Suction Service Valve
3/8 inch 3-way valve, Strongly fixed to bracket * 1EA

CM0115: Discharge Service Valve
3/8 inch 3-way valve, Strongly fixed to bracket * 1EA

CM0116: Service valve fixed bolt
M6*18 * 4EA

CM0117: Cooper pipe to service valve and liquid receiver
3/8 inch bending cooper tube * 1EA

CM0118: Cooper pipe to liquid receiver and compressor
3/8 inch bending cooper tube * 1EA

CM0119: Compressor discharge pipe
3/8 inch bending cooper tube * 1EA

(2) Evaporator Module

Serial No : HE01

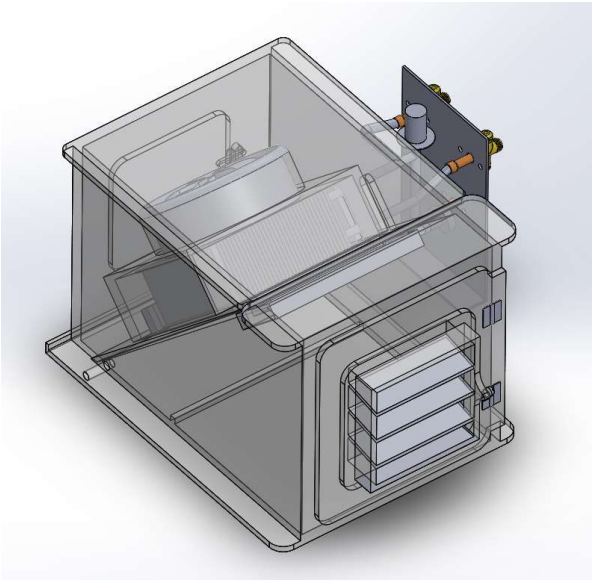

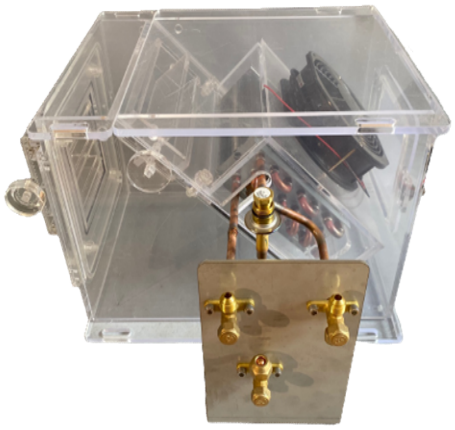

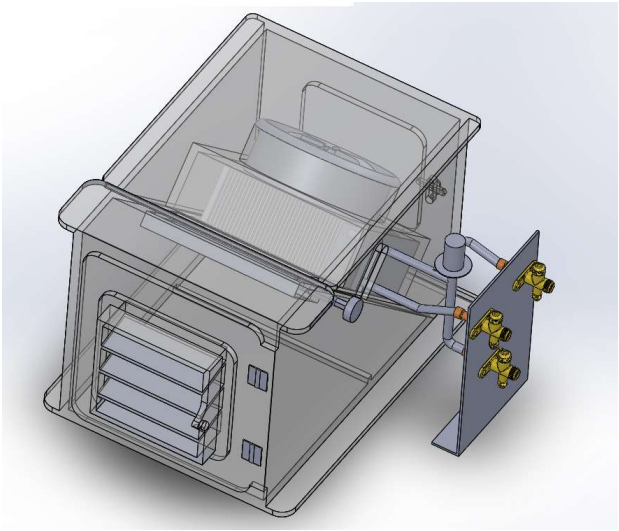

Evaporator Module

EV0101: Stainless Steel Bracket
2T SUS consist of three plate W140mm* D35mm* H285m * 1SET
The stainless steel bracket is designed to fix the bottom plate and the service valve supporting the heat exchanger, fan motor, and acrylic chamber, and to practice the pipe connection with the flare nut.

EV0102: Bottom of Chamber

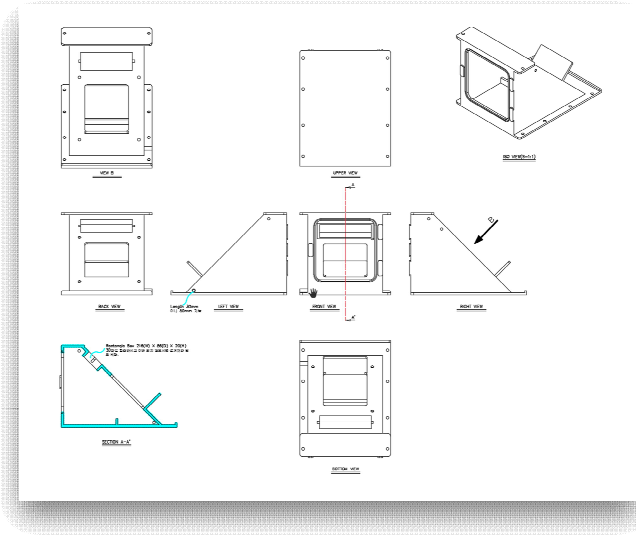

Bottom View of the Chamber

- Configuration
  Bottom plate of Chamber, Heat Exchanger Case, Fan Motor Case, Front Cover, Front damper, Middle of nobe
- Material : Acrylic
- Feature : The bottom and top of the chamber can be seperated and the heat exchanger coil and blower can be replaced the repaired.
- The lower part of the acrylic chamber is the main chamber of the evaporator chamber and is equipped with a heat exchanger and a fan motor for heat exchange experiments.
- The front cover has a damper made of a rack pinion gear, and the load change experiment is carried out by adjusting the damper opening degree from 0 to 100 %.

EV0103: Top of Chamber

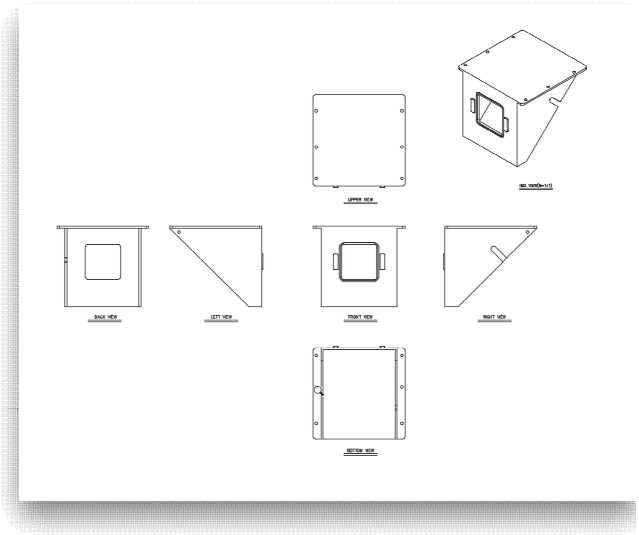

Top View of the Chamber

- Configuration
  It consists of chamber top plate, back door, main chamber and fixed bridge, which are assembled with the bottom of the chamber.
- Material : Acrylic
- Feature : The bottom and top of the chamber can be seperated and the heat exchanger coil and blower can be replaced the repaired.
- The lower part of the acrylic chamber is the main chamber of the evaporator chamber, and was equipped with a heat exchanger and a fan motor to perform heat exchange experiments.
- There is a damper made of a rack pinion gear, and the load change experiment is carried out by adjusting the damper opening degree from 0 to 100 %.

EV0104: Heat Exchanger

Fin-tube air-cooled Type, Surface area 1.5㎡, Fin-Pitch 2.5mm,
Tube 3/8″ × 7step × 3row × 165EL * 1EA

EV0105: Heat Exchanger cover

It is made of acrylic material, and fan motor is attached to the cover, and the load change experiment is carried out by controlling the motor speed. * 1EA

EV0106: Chamber connection accessories

It is a part that connects the upper part and the lower part of the acrylic chamber, and is configured to be fixed to both the left and right sides.
Fix with bolts and nuts made of acrylic material, * 2EA

EV0107: Acrylic Bolt

Front cover and main chamber connection * 8EA
Heat exchanger fixed case and main chamber connection * 4EA
Chamber top and bottom connection * 4EA

EV0108: Chamber open/close part

Material : Acrylic * 1EA

EV0109: Front door

It is connected to the main chamber and can bel fully opend and closed.
The load can be controlled * 1EA

EV0110: Back door

It is connected to the upper part of the chamber, and it is fully opened and closed, and external air can be introduced into the chamber to perform the load change experiment. * 1EA

EV0111: Front damper

It is connected to the front cover and is made of rack pinion gear type.
Although the front door can bel fully opened or closed, the opening rate can be adjusted for more precise load control. and the experiment can be performed in 6 steps as 0 % (Close), 20 %, 40 %, 60 %, 80 %, 100 % (Open) * 1EA

EV0112: Middle knob

It is role that serves to circulate air between the upper and lower sides of the acrylic chamber. * 1EA

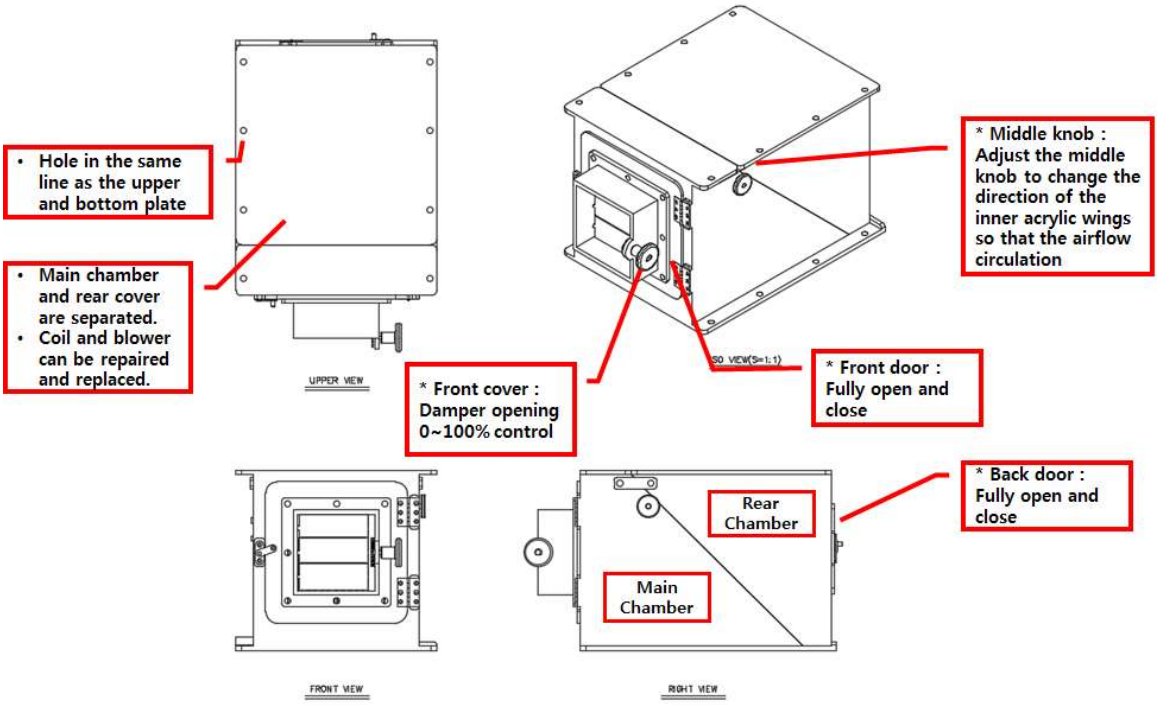

Structure and Features of Acrylic Chamber

EV0113: Hinge

It is the part that connects the front door and back door to the upper and lower sides of the acrylic chamber, and it is necessary when fully opening and closing for the load change experiment. * 4EA

EV0114: Latch

It is used when completely closing the front door and the back door, and is mainly used for the refrigeration experiment.

EV0115: Fan motor

220q AC220V 50/60Hz 0.38/0.39A 49/50W * 1EA

EV0116: Fan Motor fixed bolt

M3*70 cross * 4EA

EV0117: Defrost electrical heater

It is located between the heat exchanger coil and the pin, and when the refrigeration experiment is carried out for a long time, the heat exchanger pins are inserted between the pins. In this case, the heat exchanger does not work smoothly, and it removes it through the thermal defrosting.

Thermal capacity : 500 W, * 1EA

EV0118: Stainless Steel Bracket fixed bolt, M6*18 * 4EA

EV0119: Chamber fixed bolt, M6*18 * 8EA

EV0120: Manual Expansion Valve
Manual Expansion Valve capacity range : 1/2 ~ 1,1/2tons, Temp 0°F(-10℃) * 1EA
The high-temperature, high-pressure liquid refrigerant is adiabatically expanded with a low-temperature, low-pressure liquid refrigerant so as to easily evaporate in the evaporator.

EV0121: Manual expansion valve inlet pipe
3/8 inch bending cooper tube * 1EA

EV0122: Evaporator inlet pipe
3/8 inch bending cooper tube * 1EA

EV0123: Evaporator outlet pipe
3/8 inch bending cooper tune * 1EA

EV0124: Pressure sensor capillary

EV0125: Expansion valve outlet pressure sensor
5V Input to 0.5~4.5V Output, 8~30V Input 4~20mA, to 1~5V Output * 1EA
Range : -1~35kgf/cm2

EV0126: Expansion valve inlet temperature sensor
Thermo-Couple K-Type 032q * 1EA

EV0127: Evaporator inlet temperature sensor
Thermo-Couple K-Type 032q * 1EA

EV0128: Evaporator outlet temperature sensor
Thermo-Couple K-Type 032q * 1EA

EV0129: Service valve inlet
3/8 inch 3-way valve, Strongly fixed to bracket * 1EA

EV0130: Service valve outlet
3/8 inch 3-way valve, Strongly fixed to bracket * 1EA

EV0131: Service valve fixed bolt

M6*18 * 4EA

EV0132: Nipple

3/8 inch nipple * 2EA

The charging nipple is the requisite to use the manifold gauge for the airtight and vacuum tests and refrigerant filling and transferring of the standard refrigeration test equipment. It is attached to the low and high pressure ducts on the mechanical compressor output and input sides. Before soldering the charging nipple to the high and low pressure ducts on the compressor output and input sides, the internal rubber(for keeping the airtight state) ring is removed and set again after refrigeration.

(3) Condenser Module Serial No : HE02

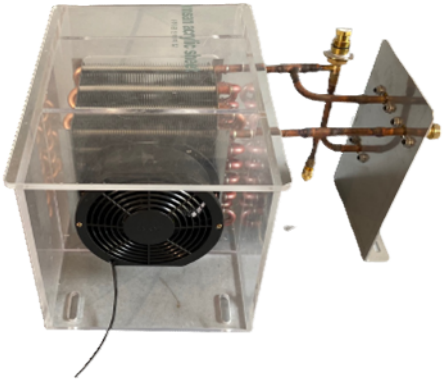

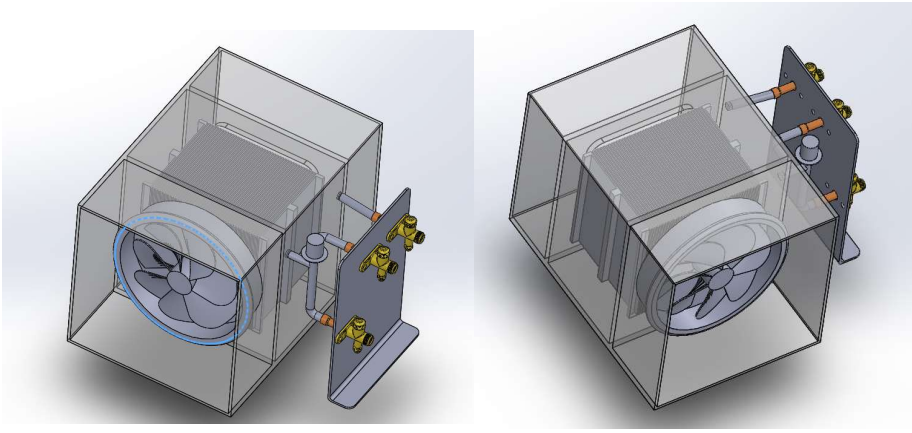

Condenser Module

CE0101: Stainless Steel Bracket
2T SUS consist of three plate W140mm* D35mm* H285m * 1SET
The stainless steel bracket is constructed to fix the acrylic chamber, bottom plate, and service valve and to practice the piping connection with the flare nut.

CE0102: Stainless Steel Bracket fixed bolt
M6*18 * 6EA

CE0103: Acrylic Chamber
Transparent acrylic chamber 8T, 250(W) × 260(D) × 300(H)mm * 1EA
The condenser emits and condenses the refrigerant gas heat at the high temperature and pressure from the compressor to the air at the room temperature. It condenses and liquidizes the heat of gaseous refrigerant through the heat exchange between the gaseous refrigerant at the high temperature and pressure from the compressor and the surrounding air or cooling water. The condenser emits the hot blow as the external device. The refrigerant gas from the compressor is liquidized to the refrigerant liquid. The condenses the refrigerant gas from the compressor at

the high temperature and pressure to the liquid refrigerant at the high temperature and pressure through the heat exchange between the refrigerant gas and water or air at the room temperature. The reason to change the refrigerant gas to the liquid state is to use the latent heat during the change of state. The highest volume of heat can be taken from the evaporator when using the latent heat, that is, when the liquid state is changed to the gaseous state. If the condenser is installed in the place with too higher external temperature or lower ventilation because of foreign substances, the condensing temperature and pressure become increased so that the evaporator will not work properly. Thus, the refrigeration effect can be improved when the condenser is installed near the compressor and on the place that is well ventilated without direct sunlight. The condenser requires the special attention for more effective heat exchange with the external air through the regular fan cleaning. The condenser receives, condenses and liquidizes the refrigerant gas from the compressor. Higher refrigeration effect(that is, if the heat exchange between the coolant and refrigerant gas is well processes) of the condenser reduces the temperature and condensing pressure inside the condenser. The condenser works at the constant condensing temperature as the volume of refrigerant gas from the compressor keeps the balance with the cooling operation of condenser.

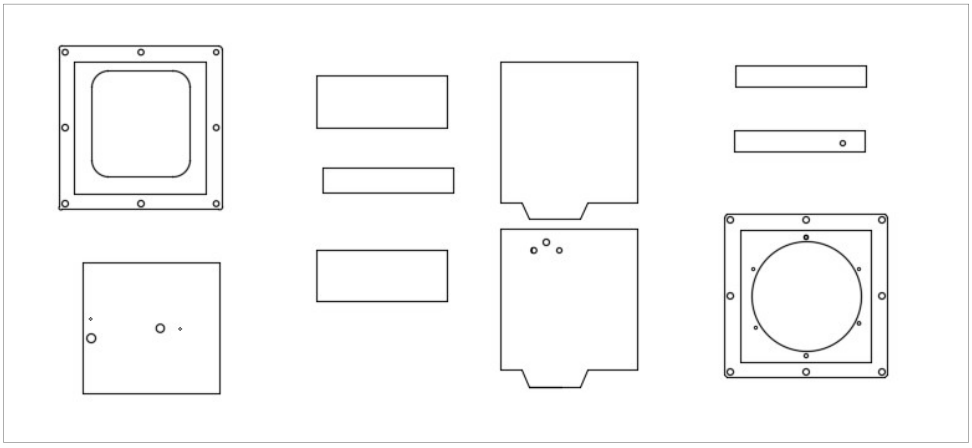

View of Chamber

CE0104: Chamber fixed bolt
M6*36 * 4EA

CE0105: Heat Exchanger
Fin-tube air-cooled Type, Surface area 1.5㎡, Fin-Pitch 2.5mm,
Tube 3/8″ × 7step × 3row × 165EL * 1EA

CE0106: Fan Motor
220q AC220V 50/60Hz 0.38/0.39A 49/50W * 1EA

CE0107: Fan Motor fixed bolt
M3*70 cross * 4EA

CE0108: Service Valve of Condenser Inlet

3/8 inch 3-way valve, Strongly fixed to bracket * 1EA

CE0109: Service Valve of Condenser Outlet
3/8 inch 3-way valve, Strongly fixed to bracket * 1EA

CE0110: Service Valve fixed bolt
M6*18 * 4EA

CE0111: Pressure Sensor of Condenser Outlet
5V Input to 0.5~4.5V Output, 8~30V Input 4~20mA, to 1~5V Output * 1EA
Range : -1~35kgf/cm2

CE0112: Temperature Sensor of Condenser Inlet
Thermo-Couple K-Type 032q * 1EA

CE0113: Temperature Sensor of Condenser Outlet
Thermo-Couple K-Type 032q * 1EA

CE0114: Cooper pipe of Condenser Inlet
3/8 inch bending cooper tube * 1EA

CE0115: Cooper pipe of Condenser Outlet
3/8 inch bending cooper tube * 1EA

CE0116: Nipple
3/8 inch Nipple * 2EA
The charging nipple is the requisite to use the manifold gauge for the airtight and vacuum tests and refrigerant filling and transferring of the standard refrigeration test equipment. It is attached to the low and high pressure ducts on the mechanical compressor output and input sides. Before soldering the charging nipple to the high and low pressure ducts on the compressor output and input sides, the internal rubber(for keeping the airtight state) ring is removed and set again after refrigeration.

(4) Liquid Receiver Module Serial No : RCH01

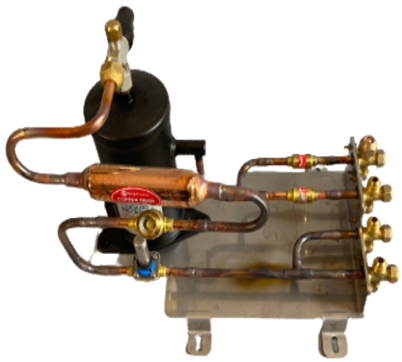

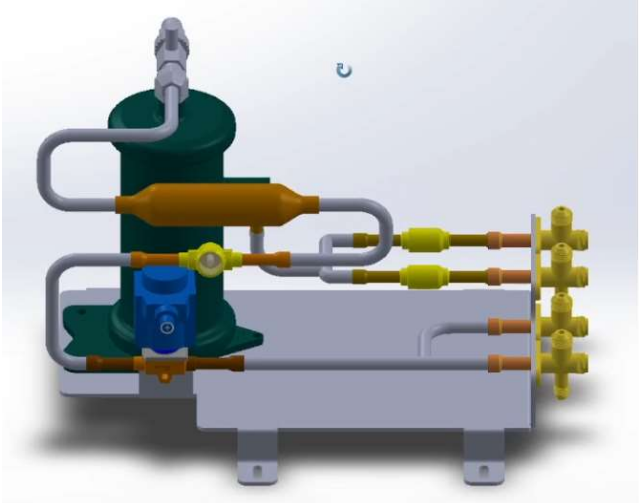

Liquid Receiver Module

RC0101: Stainless Steel Bracket
2T SUS consist of three plate W140mm* D35mm* H285m * 1SET
The stainless steel bracket is configured to fix the module, bottom plate, and service valve including the liquid receiver, filter dryer, sight glass, and solenoid valve, and to connect the pipe with the flare nut.

RC0102: Stainless steel fixed bolt
M6*18 * 4EA

RC0103: Liquid Receiver
Cylinder Type, Included service valve
capacity : 1/2 Hp, pressure : 22kgf/cm2, Proof test : 33kgf/cm2
Confidential Pressure : 22kgf/cm2G, Available : 75℃, ∅90mm * 1EA
Liquid receiver is a liquid refrigerant reservior before send refrigerant to expansion valve. It play a role to make system stable as send only liquid refrigerant and can pump down to retrieve refrigerant or for repair a equipment.

RC0104: Liquid Receiver fixed bolt
M6*18 * 3EA

RC0105: Service Valve

RC0106: Service Valve Inlet
3/8 inch 3-way valve, Strongly fixed to bracket * 1EA

RC0107: Service Valve Outlet
3/8 inch 3-way valve, Strongly fixed to bracket * 1EA

RC0108: Service Valve fixed bolt
M6*18 * 4EA

RC0109: Filter Drier
⅜″ Welding Type * 1EA,
Any moisture or impurities that exist in the refrigerants have a variety of negative impacts on the refrigerators. Then, the filter drier removes moisture or impurities. It is installed between the expansion valve and the receiver.

RC0110: Sight Glass
Welding Type * 1EA
Sight glass is installed between receiver and expansion valve is used to confirm the amount of refrigerant charging. If the amount of charging is good. cannot see any bubbles through the sight glass, only can see the flow of pure liquid.

RC0111: Solenoid Valve
⅜″ Welding Type * 1EA
The electronic valve for main duct controls the refrigerant flow as it is opened or closed depending on the power input. It is connected to the temperature switch in eries during the pump-down operation. In this case, the pump-down operation is processed by the opening or closing of the electronic valve for the main duct according to the closing or opening of temperature switch contact.

RC0112: Flare Nut
Size 3/8 inch * 1EA

RC0113: Cooper pipe to liquid receiver and service valve
3/8 inch bending cooper tube * 1EA

RC0114: Cooper pipe to liquid receiver and filter drier
3/8 inch bending cooper tube * 1EA

RC0115: Cooper pipe to filter drier and sight glass

3/8 inch bending cooper tube * 1EA

RC0116: Cooper pipe to sight glass and solenoid valve

3/8 inch bending cooper tube * 1EA

RC0117: Cooper pipe to solenoid valve and service valve

3/8 inch bending cooper tube * 1EA

(5) 4-Way Valve Module Serial No : R4W01

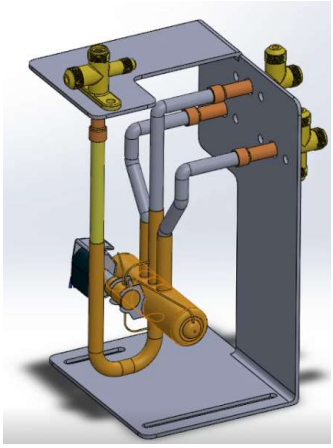

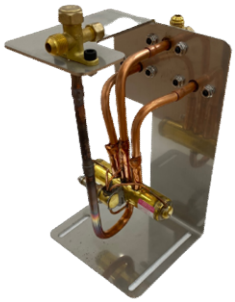

R4W01

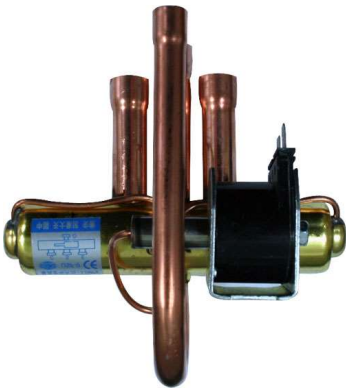

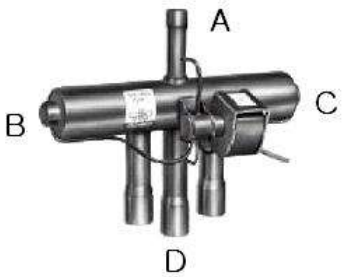

4way valve doesn`t basically work when the pressure is not connected with high or low pressure. Surely Solenoid valves that control the direction work as signal, but real no there is any change direction inside its. In other words, its are designed to work under high or low pressure. as seeing the fig. its solenoid valves are connected with cross way A,B,C, and D. Inside 4way valve body there is a cab that has a size available to connect between line D and a line of right side or left, and designed to be shift right and left. Its principle is (In the fig. of 4way valve, A side is high pressure, D low.); when refrigeration cycle runs, if line A-B and line C-D opened by solenoid valve, line B becomes high pressure, line C Low, so that the given cab sticks to line C by different pressure. Then line A-B and C-D inside 4way valve become float line. On opposite way, when A & C, B & D are connected with each other, line A-C, B-D become float line, and then the flowing direction changes inside it.

1-3. Control panel device component

< Control panel Full >

<Common Control panel>

<MO Control panel>

Chapter 2. Component of Heat pump cooling & heating apparatus

1. Mechanical device & Automatic control device component

(1) Main Power (N.F.B)

Main Power

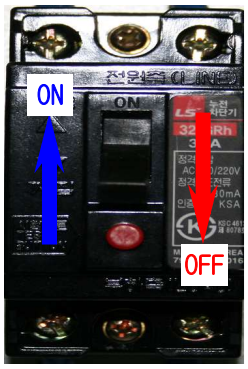

N.F.B

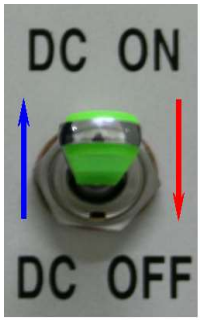

Toggle Switch

The over current breaker(N.F.B) protects the compressor motor, fan motor of condenser or evaporator or wires of the refrigeration training equipment from the over current due to overloads or short circuit. The circuits are automatically cut out so that the equipment stops operation. It is not required to replace like a fuse if any cutout is occurred. The power can be immediately and easily reentered just using a handle.

After connection between equipment and power line, for flowing of current a NFB is used, and then a AC LAMP will be on. And also if a Toggle switch is on, a DATA LOG device is on.

(2) DC Volt Meter and DC Ampere

1. This device installed in equipment measures Voltage by DC.

2. This device installed in equipment measures current by DC.

(3) Buzzer

The buzzer and alarm lamp display the abnormal status when a thermal relay and safety devices(H.P.S) are working. That is, the alarm lamp is more effective than the buzzer in the noisy places and the buzzer is more effective than the alarm lamp for the color blind operators in the quiet working places. Using both the buzzer and alarm lamp will be ideal.

(4) Lamp

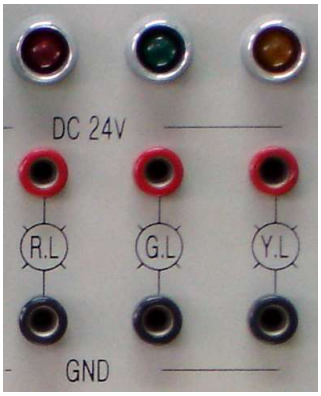

The power lamp(P.L) is on when the power is connected and the operating lamp (G.L) is on during the operation. the stop lamp(R.L) is on when the operation stops and the emergency lamp or alarm lamp(Y.L) displays the abnormal status during the operation such as operation of thermal relay. The reserve lamp(Y.L) circuit can be configured to be turned on when the automatic control devices such as low temperature switch, temperature control switch and condensation and pressure control switch are operating.

(5) Pressure Switch

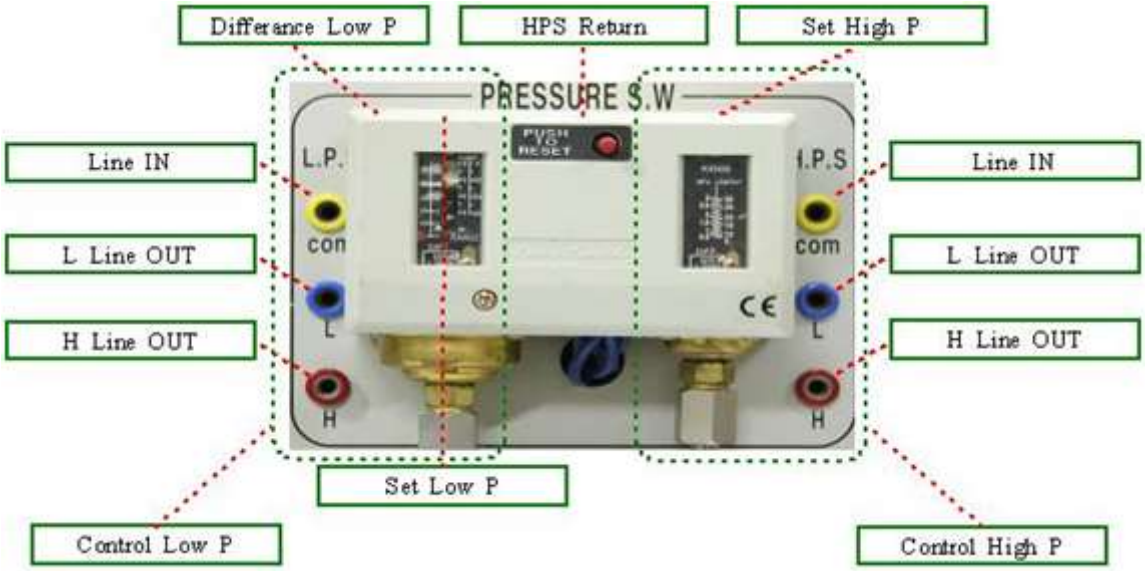

The Dual Pressure Switch(DPS) is the set of HPB and LPS. If the high pressure is over a certain level or the low pressure is below a certain level, it stops the motor for compressor. The excessively low differential pressure of LPS induces frequent setout of compressor and this is called Hunting.

On the contrary, the excessively high differential pressure of LPS extends the down time too much. So the temperature in the refrigeration room is increased. This is called Off Set.

A. L.P.S Low pressure control

In Fig. 1-22, the right part of dotted line shows setting value (RANGE) of low pressure, the other part difference (DIFF).

Ⓐ Set your desirable low pressure value by screw pin using screw driver.

Ⓑ Set your desirable difference value by screw pin using screw driver.

Ⓒ Connect between 'H' or 'L' and 'com' as your desirable control.

Ⓓ LPS-L Line OUT(When the desire value is lower than your setting value, connect 'com' and

'L')

Ⓔ LPS-H Line OUT(When the desire value is upper than your setting value, connect 'com' and 'H'.)

B. H.P.S High pressure control

Ⓐ Set your desirable high pressure value by screw pin using screw driver.

Ⓑ LPS-L Line OUT(When the desire value is lower than your setting value, connect 'com' and 'L')

Ⓒ LPS-H Line OUT(When the desire value is upper than your setting value, connect 'com' and 'H', RESET : return.)

(6) Magnetic Contactor

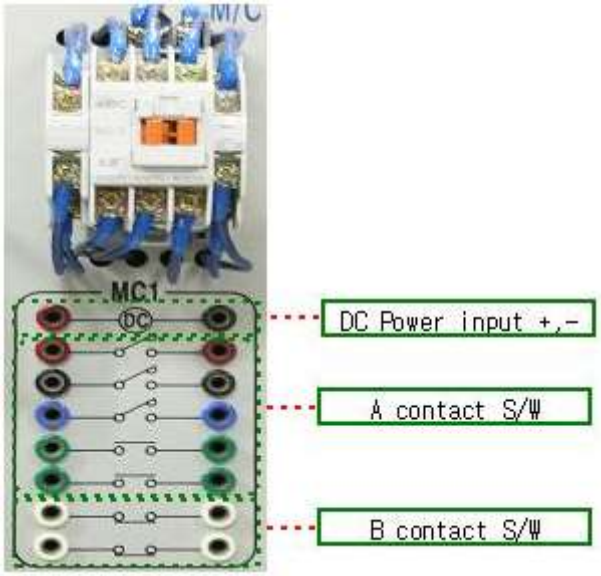

Magnetic contactor (MC) controls compressor motor, condenser motor, solenoid valve and evaporator motor through sequence circuit.

① DC Power red is +, black -.

② When DC power is on, A contact sticks to each other, so current can flow, and B contact separated, so current cut.

(7) Relay

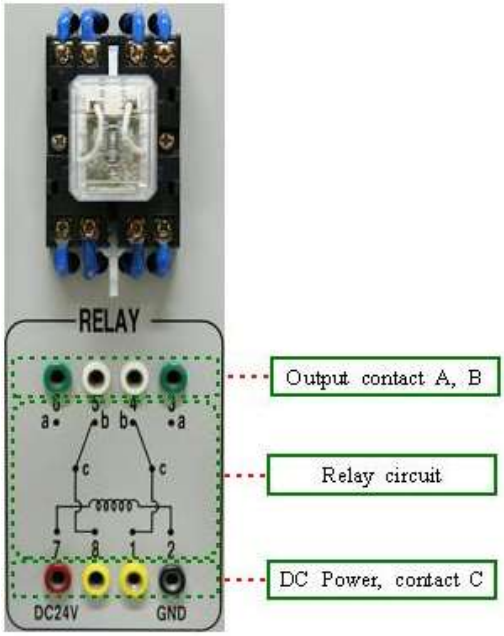

Relay controls compressor motor, condenser motor, solenoid valve and evaporator motor through sequence circuit.

① DC Power red is +, black -.

② When DC power is on, each contactor 1-3, 8-6 are connected each other(Flow current), at same time separated contactor 1-4, 8-5 each other(Close current).

(8) Thermal Relay

This device is called by thermostat overload relay makes the contact work under abnormal current than setting valve, so this device is needed for protecting from overflow current aborutly. The bimetallic thermostat operates as a function of expansion or contraction of metals due to temperature changes. Bimetallic thermostats are designed for the control of heating and cooling in air-conditioning units, refrigeration storage rooms, greenhouses, fan coils, blast coils, and similar units.

The working principle of such a thermostat is two metals, each having a different coefficient of expansion, are welded together to form a bimetallic unit or blade. With the blade securely anchored at one end, a circuit is formed and the two contact points are closed to the passage of an electric current. Because an electric current provides heat in its passage through the bimetallic blade, the metals in the blade begin to expand, but at a different rate. The metals coefficient of expansion is

placed at the bottom of the unit. After a certain time, the operating temperature is reached and the contact points become separated, thus disconnecting the appliance from its power source.
After a short period, the contact blade will again become sufficiently cooled to cause the contact point to join, thus reestablishing the circuit and permitting the current again to actuate the circuit leading to the appliance. The foregoing cycle is repeated over and over again. In this way, the bimetallic thermostat prevents the temperature from rising too high or dropping too low.

(9) Temperature Indicator and Controller

The digital temperature meter(Temp Meter) for measuring temperature measures on a defined areas for the performance test when the refrigeration training equipment is running. Then, it draws the pressure-enthalpy diagram with the measured temperature for the performance test of refrigeration training equipment. At this moment, the digital temperature meter is required to measure the temperature on each area. The performance test of refrigerator will be separately described.

① Setting temperature value by push set button.
② Choose temperature value by push up or down button.
③ Setting deviation value.
④ Connect contactor 'com' and '+ '.
⑤ Connect contactor 'H' or 'L' and '+'.

(10) On/Off Switch

This device is for start, stop, or ON/OFF.

① PB1 is for Running (A contact)
② PB2 is for Stop (B contact)

(11) Toggle Switch

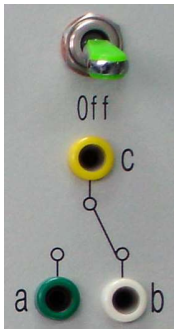

This device is for start, stop, or ON/OFF.

① Connect 'C' and '+' power, operate by selection of 'a' or 'b'

(12) DC Power input

COMP : Compressor Motor

Heat ex1 : Heat Exchanger 1

Heat ex2 : Heat Exchanger 2

SV : Solenoid Valve

4-Way V/V : 4-Way Valve

Plug for electric circuit among each devices(Red plug +, Black - .)

Cooling

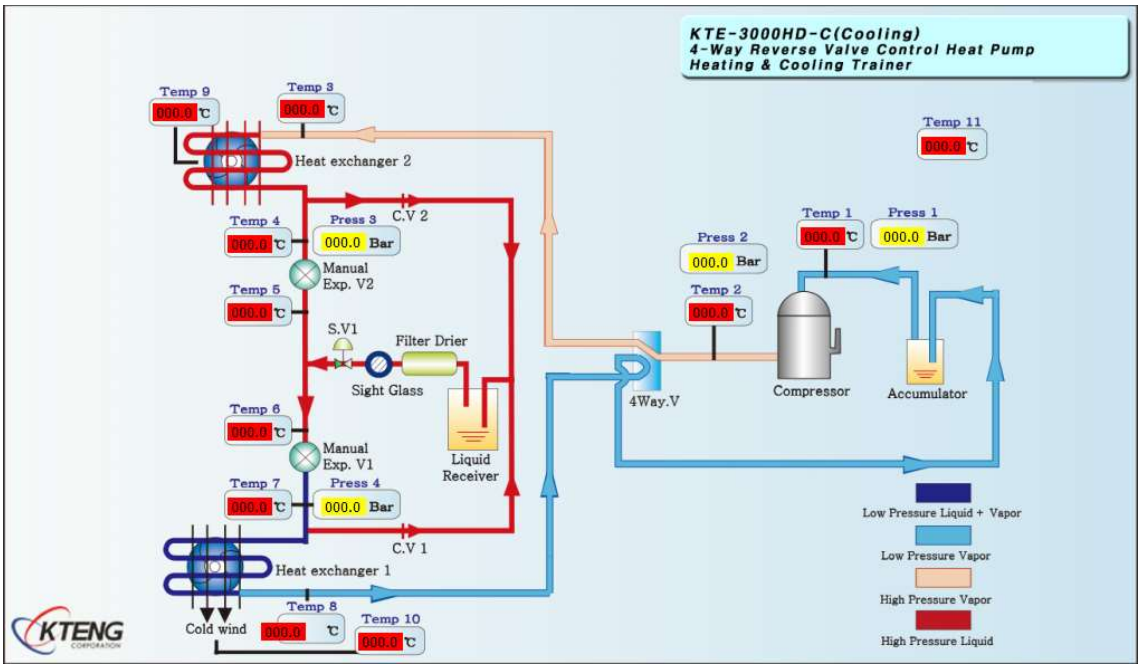

Heating

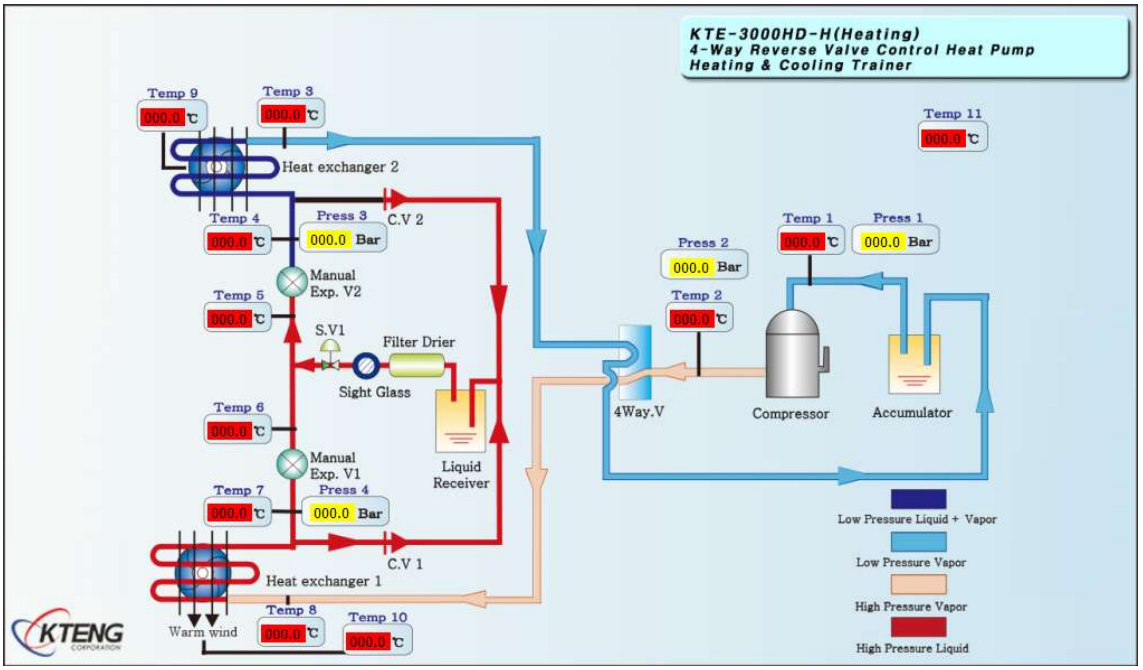

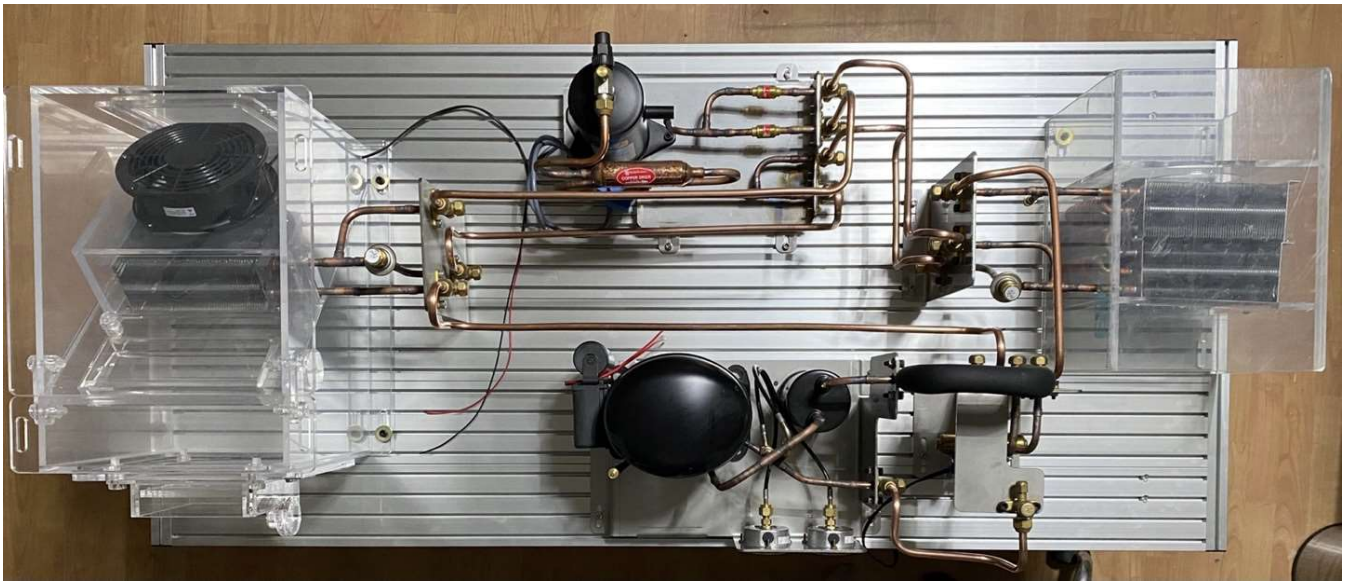

- Each component is modularized using a service valve and a flare nut, so it can be cut and bent according to the size by referring to the system diagram.

Chapter 3. Construction and Operation as circuit

Experiment name	3-1. Practicing to configurate circuit using contact point "c" of Ry device.	Class time(hr)
		8
The object of experiment	① To understand construct and principal of relay(Ry) ② To configurate circuit using contact point "c" of Ry ③ To descript about configuration circuit using contact point "c" of Ry	

Experiment equipments	Tool & material	Spec of tools	Q'nty
· 4-way reverse valve control heat pump training equipment (KTE-1000MOH)	· Driver · Nipper · Wire Stripper · Hook meter	· #2× 6 × 175mm · 150mm · 0.5~6mm^2 · 300A 600V	1 1 1 1/Group

Control Circuit

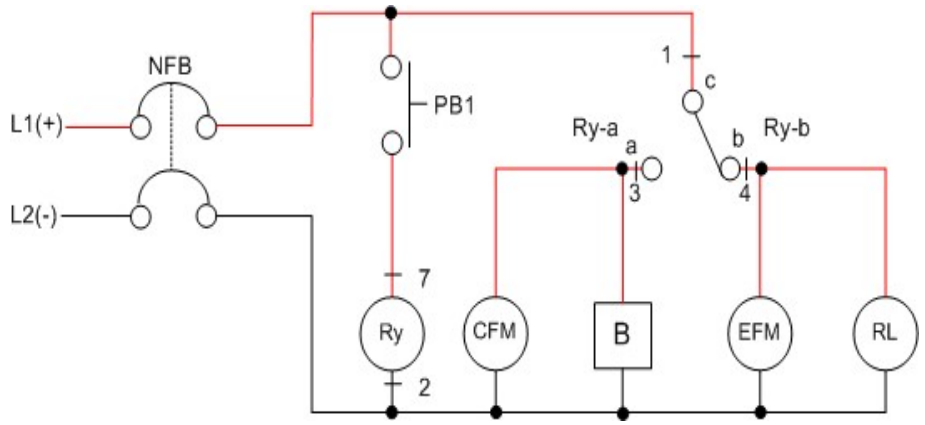

L1, L2 : Line Voltage
N.F.B : No fuse circuit breaker
B : Buzzer
EFM : Heat Exchanger 2
RL : Red Lamp
CFM : Heat Exchanger 1
PB : Push button

A. When N.F.B is on, EFM and R.L are ON because contactor RY-b is closed, and for contactor RY-a is open, CFM and Buzzer are OFF. (Under PB1 is open)
B. When PB1 is pushed, current flows on Relay coil at the same time contactor RY-a is closed, so CFM and Buzzer are ON.
C. Contactor "a" means working contact, initial a from arbeit contact
D. Contactor "b" means breaking contact, initial b from breaking contact.

· Check point

1. Checking tools and materials.
2 Practicing more 2 times through banana jacks using equipment(KTE-1000TP or KTE-1000BA), tools and materials.
3. Understanding construct and principal of MC.
4. Understanding the function of operating circuit.
   ① Explaining the running process when PB is pushed.
   ② Explaining the running process when PB is released.
5. Describing contact "c" of refrigeration circuit.
6 Practicing to configurate circuit with electric wire using refrigeration real wiring trainer.(KTE-4000SQ).

Relationship between technical description rating items and task	Appraisal		Allot	Point	Remark			
	Work (Point 70))	Circuit configuration using banana jack	20					
		Circuit configuration using real wire	20					
		Configuration state	10					
		Understand and description for circuit	20					
	Task (Point 10)	Task attitude and safety	5					
		Application and standstill of tools	5					
	Time (Point 20)	· Demerit mark Point ( ) in every ( ) minute after finish			Work	Task	Time	Total

Experiment name	3-2. Practicing to configurate circuit using contact point "a","b" of magnet contactor(MC).	Class time(hr)
		8
The object of experiment	① To understand construct and principal of magnet contactor(MC) ② To configurate circuit using contact point "a", "b" of MC ③ To descript about configuration circuit using contact point "a", "b" of MC	

Experiment equipments	Tool & material	Spec of tools	Q'nty
· 4-way reverse valve control heat pump training equipment (KTE-1000MOH)	· Driver · Nipper · Wire Stripper · Hook meter	· #2× 6 × 175mm · 150mm · 0.5~6mm^2 · 300A 600V	1 1 1 1/Group

Control Circuit

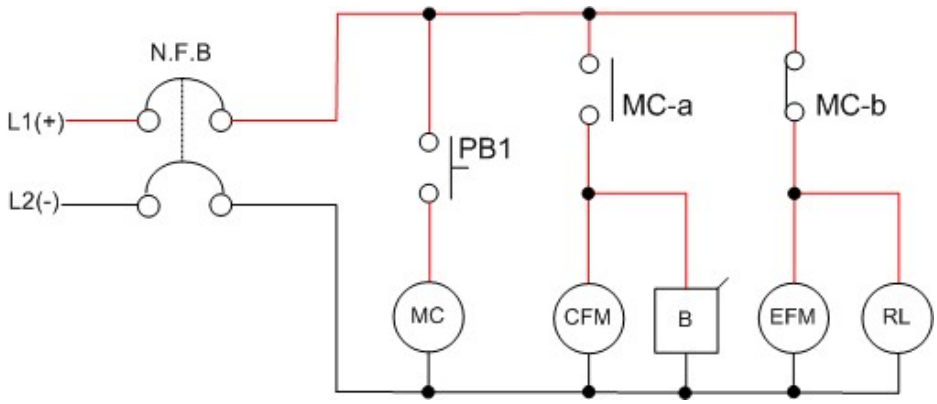

L1, L2 : Line Voltage
N.F.B : No fuse circuit breaker
CFM : Heat Exchanger 1
EFM : Heat Exchanger 2
MC-a : MC "a" contact
MC-b : MC "b" contact
B : Buzzer
PB : Push button
RL : Red Lamp
MC : Magnet contactor coil

A. When N.F.B is on, EFM and R.L are ON because contactor MC-b is closed, and for contactor MC-a is open, CFM and Buzzer are OFF. (Under PB1 is open)
B. When PB1 is pushed, current flows on magnetic coil at the same time contactor MC-a is closed.
C. Contactor "a" means working contact, initial a from arbeit contact
D. Contactor "b" means breaking contact, initial b from breaking contact.

1. circuit of contact "a", circuit of contact "b"

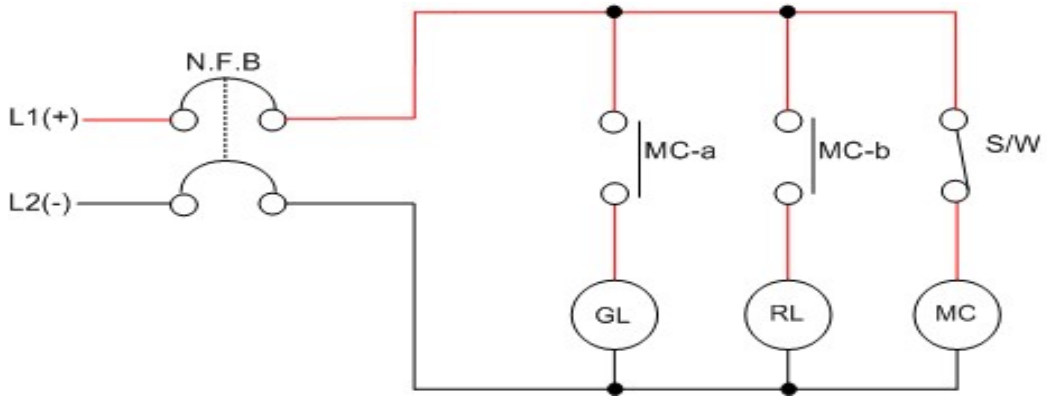

A. If NFB switch is on, MC-b contact is closed and RL is on , MC-a contact is opened and GL is off. (S/W opening state)

B. If S/W is closed, MC-a contact is closed and GL is on, MC-b is opened and RL is off.

C. Arbeit contact means 『working contact』, so it`a initial is "a".

D. Break contact means 『Opening contact』, so it`s initial is "b".

2. contact "c" (change circuit)

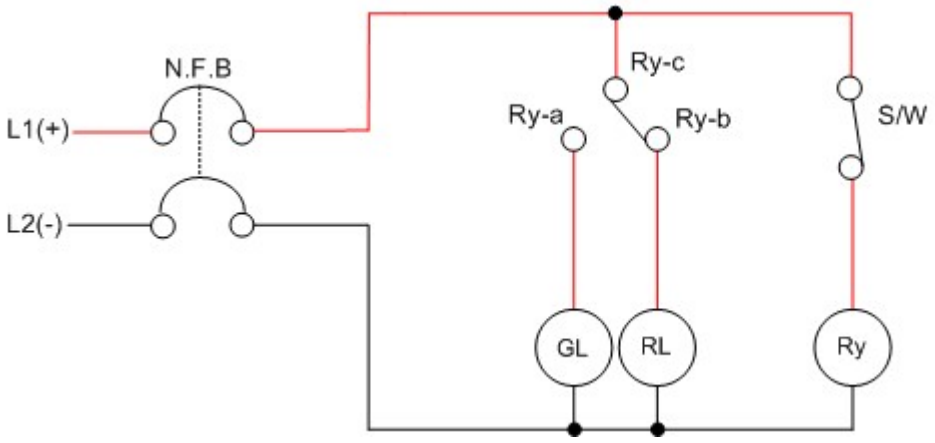

A. If N.F.B S/W is closed, RL is on and GL is off.

B. If S/W is closed, contact "b" is opened and RL is on, contact "a" is closed and GL is off. As like this, when there is current at electric coil Ry, one side is "a" contact circuit that is closed, the other side is "b" contact that is opened.

C. Change over contact means 『transferring contact』, so it`s initial "c".

· Check point

1. Checking tools and materials.
2 Practicing more 2 times through banana jacks using equipment(KTE-3000HD), tools and materials.
3. Understanding construct and principal of MC.
4. Understanding the function of operating circuit.
   ① Explaining the running process when PB is pushed.
   ② Explaining the running process when PB is released.
5. Describing contact "a" and contact "b" of refrigeration circuit.
6 Practicing to configurate circuit with electric wire using refrigeration real wiring trainer.(KTE-4000SQ).

Relationship between technical description rating items and task	Appraisal		Allot	Point	Remark			
	Work (Point 70))	Circuit configuration using banana jack	20					
		Circuit configuration using real wire	20					
		Configuration state	10					
		Understand and description for circuit	20					
	Task (Point 10)	Task attitude and safety	5					
		Application and standstill of tools	5					
	Time (Point 20)	· Demerit mark Point ( ) in every ( ) minute after finish			Work	Task	Time	Total

Experiment name	3-3. Practicing to configurate self-holding circuit for priority STOP of standard refrigeration system.	Class time(hr)
		8
The object of experiment	① To understand self-holding circuit for priority STOP, and to operate standard refrigeration system as the circuit. ② To describe self-holding circuit configuration for priority STOP of standard refrigerator.	

Experiment equipments	Tool & material	Spec of tools	Q'nty
· 4 way valve reverse valve control heat pump training equipment (KTE-1000MOH)	· Driver · Nipper · Wire Stripper · Hook meter	· #2× 6 × 175mm · 150mm · 0.5~6mm^2 · 300A 600V	1 1 1 1/Group

Control Circuit

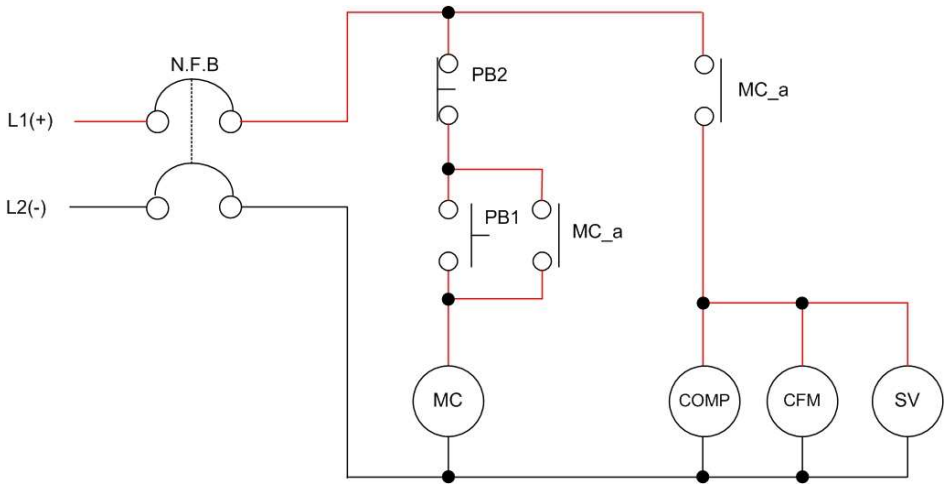

L1, L2 : Line Voltage
N.F.B : No fuse circuit breaker
MC : Magnet contactor coil
MC-a : MC "a" contact
CFM : Condenser Fan Motor
SV : Solenoid V/V
PB : Push button
COMP : Compressor motor

1. Manual Operating Circuit(Self-Holding Circuit) Design and Configuration in Refrigerator

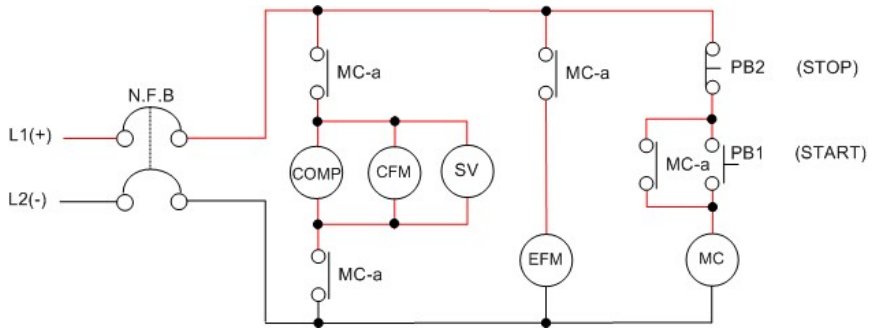

The manual operating circuits are configured, tested and experimented using the banana jacks in accordance with the refrigeration cycle drawings and operating circuits. The circuit designs and configuration principles are described below. Turn the Start button on, and the MC coil(MC Electric Coil) is excited. So the relay circuit “a”, the main contact, is closed and the Motor Compressor and Condenser Fan Motor run. Then, the normal operation is started. Press the Stop button to turn the circuit off, and the MC coil(MC Electric Coil) is demagnetized. Then, the main contact is opened and so the Motor Compressor, Condenser Fan Motor and Evaporator Fan stop.

For the manual operation of refrigerator, the self-holding circuit is configured and operated using the relay circuit "a" of the magnetic switch(MC Electric Coil). Press the Start button, and the refrigerator runs. Press the Stop button, and the refrigerator stops. This is the basic application control circuit in the refrigeration devices.

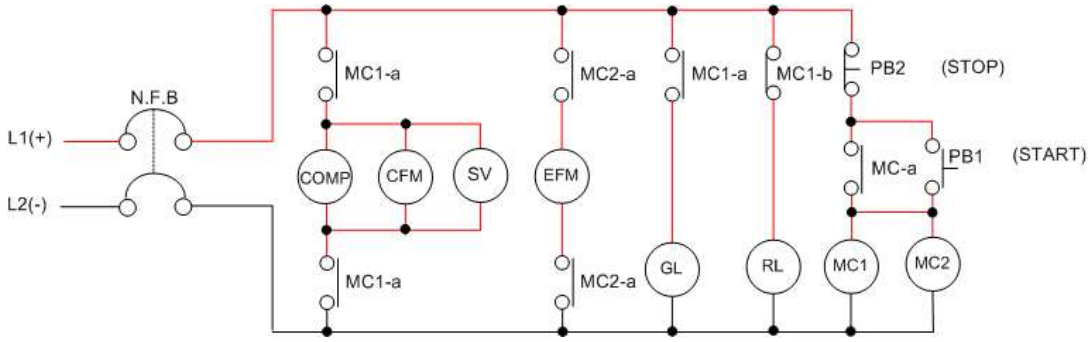

When the N.F.B is opened, the break light(RL) of the relay circuit ‘b' is on as the magnetic switch (MC Electric Coil) is demagnetized. Press the Start button, and the magnetic switch (MC Electric Coil) is excited. Then, the relay contact "a", the main contact, is closed and so the Motor Compressor, Condenser Fan and Evaporator Fan run. Accordingly, the normal operation is started. At this point, the operation light(GL) is on to indicate the refrigerator runs as the relay circuit ‘a' is closed.

The relay circuit ’b' is opened and so the break light(RL) is off. Press the Stop button, and the magnetic switch(MC Electric Coil) is demagnetized. Then, the main contact is opened and so the Motor Compressor, Condenser Fan Motor and Evaporator Fan stop. Accordingly, the operation light(GL) is off and the relay circuit "b" is closed. Then, the break light(RL) is on to indicate that the operation stops.

As described above, the manual operation to start and stop the refrigerator is carried out by configuring the self-holding circuits using the relay circuit "a" of the magnetic switch (MC Electric Coil). The refrigerators run by pressing the Start button and stop by pressing the Stop button. This method can be applied for the tests, practices and circuit designing in the actual fields.

· Check Point

1. Checking tools and materials.
2. Configurating circuit of operation with banana jacks using tools and material.
3. Understanding the function of operating circuit.
   ① Explaining the process when NFB S/W is on.
   ② Explaining the process when PB1 is pushed.
   ③ Explaining the process when PB2 is pushed.
   ④ Explaining the principal of the self-holding circuit for priority STOP.
4. Configurating circuit with electric wires and operating using tools and materials.

	Appraisal		Allot	Point	Remark			
Relationship between technical description rating items and task	Work (Point 70))	Circuit configuration using banana jack	20					
		Circuit configuration using real wire	20					
		Configuration state	10					
		Understand and description for circuit	20					
	Task (Point 10)	Task attitude and safety	5					
		Application and standstill of tools	5					
	Time (Point 20)	· Demerit mark Point ( ) in every ( ) minute after finish			Work	Task	Time	Total

Experiment name	3-4.Practicing to configurate circuit for low temperature control using a temperature switch.	Class time(hr)
		8
The object of experiment	① To understand the principal of low temperature control using temperature S/W, and adjust it. ② To configurate and operate circuit for low temperature control . ③ To understand the feature after note and define distribution and variation of low temperature points.	

Experiment equipments	Tool & material	Spec of tools	Q'nty
· 4 way reverse valve control heat pump training equipment (KTE-1000MOH)	· Driver · Nipper · Wire Stripper · Hook meter	· #2× 6 × 175mm · 150mm · 0.5~6mm^2 · 300A 600V	1 1 1 1/Group

Control Circuit

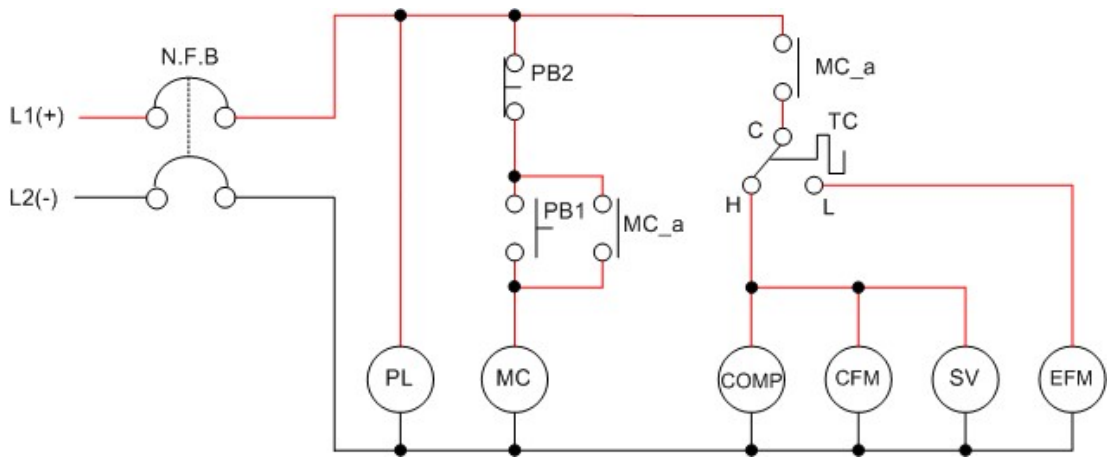

L1, L2 : Line Voltage
N.F.B : No fuse circuit breaker
PB : Push button
COMP : Compressor motor
MC-a : MC "a" contact
TC : Temperature control S/W
CFM : Heat Exchanger 1
SV : Solenoid V/V
MC : Magnet contactor coil
EFM : Heat Exchanger 2
PL : Power Lamp

distribution and variation of low temperature

Test Steps	Temperature Setting	Temperature Deviation	In T	Out T	Actual Temperature	Adjustment
1	10	6				
2	9	4				
3	8	6				
4	7	4				
5	5	6				

[Related Theory]

1. Understanding Automatic Temperature Control and Pump-down Operating Circuit

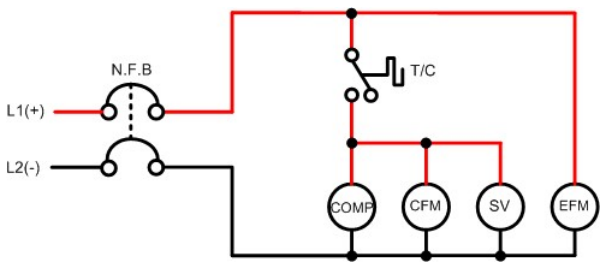

A. Automatic Refrigerator Temperature Control Overview Set the temperature → Cut-out point of the preset temperature → Condensing Unit (Compressor motor, Condenser Fan motor) stops → Cut-in point of the preset temperature→ Condensing Unit restarts

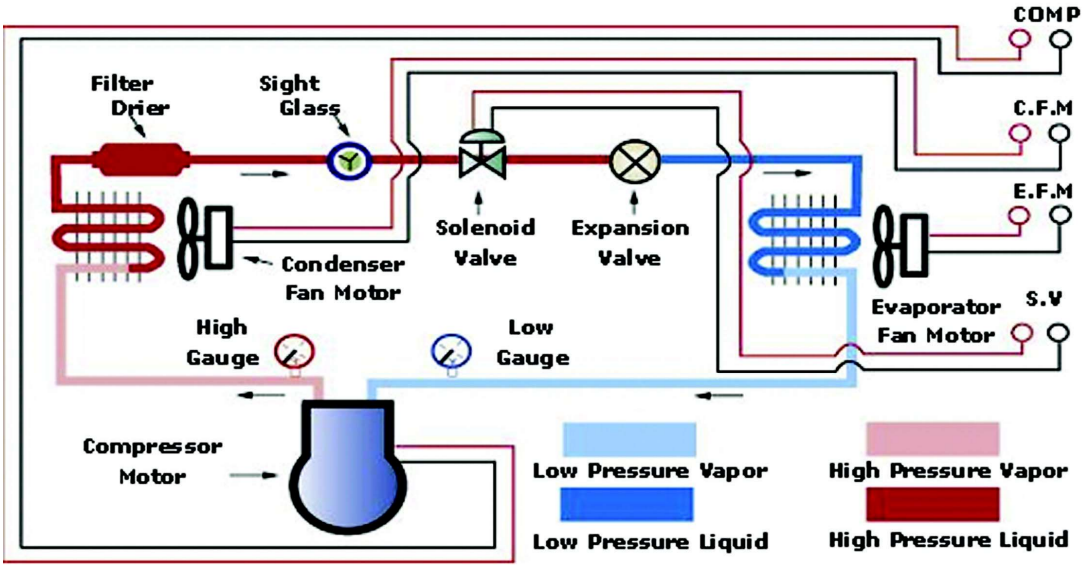

Automatic Temperature Control and Operating Circuit in Refrigeration Cycle

· Check Point

1. Checking tools and materials.
2. Configurating circuit of operation with banana jacks using tools and material.
3. Understanding the principal of temperature S/W as kinds of it, and setting the low temperature control value and explaining it.
4. Understanding the function of operating circuit.
   ① Explaining the progress when PB1 is pushed.
   ② Explaining the progress that refrigerator stops when temperature S/W is opened.
   ③ Explaining the progress that refrigerator restarts when temperature S/W is closed.
   ④ Explaining the progress that refrigerator starts when PB_2 is pushed.
5. noting and defining distribution and variation of low temperature points

Relationship between technical description rating items and task	Appraisal		Allot	Point	Remark			
	Work (Point 70))	Circuit configuration using banana jack	20					
		Circuit configuration using real wire	20					
		Configuration state	10					
		Understand and description for circuit	20					
	Task (Point 10)	Task attitude and safety	5					
		Application and standstill of tools	5					
	Time (Point 20)	· Demerit mark Point ( ) in every ( ) minute after finish			Work	Task	Time	Total

Experiment name	3-5. Practicing temp configuration of temperature switch	Class time(hr)
		8
The object of experiment	① Adjusting principle of low-temp control of temperature switch. ② To configurate and operate circuit for low pressure control and understand.	

Experiment equipments	Tool & material	Spec of tools	Q'nty
· 4 way reverse valve control heat pump training equipment (KTE-1000MOH)	· Driver · Nipper · Wire Stripper · Hook meter	· #2× 6 × 175mm · 150mm · 0.5~6mm^2 · 300A 600V	1 1 1 1/Group

Control Circuit

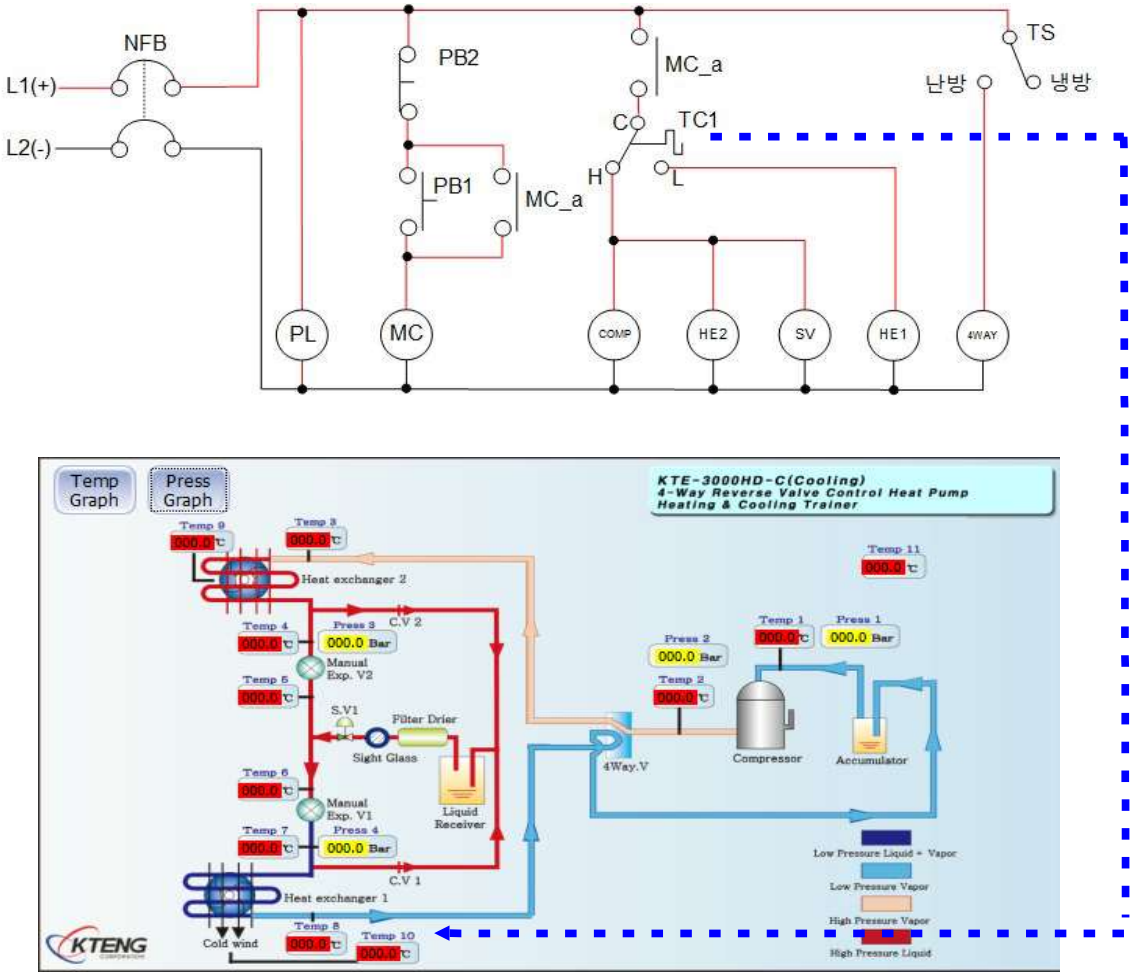

L1, L2 : Line voltage
N.F.B : No fuse circuit
COMP1 : compressor 1
MC-a : magnetic contact "a

CFM : Condenser fan motor
SV1 : solenoid valve 1
EFM : Evaporator fan motor
TC1 : Cascade1 output temp switch

No.	Temp	offset	In Temp	Out Temp	real temp	remarks
1	10	6				
2	8	4				
3	5	6				
4	0	4				
5	-2	6				

Temp setting → Cut Out Point reaches → Condensing Unit stop → Temp Cut In Point → Condensig Unit re-operate

On/Off operating in range of set temperature and diff(offset) range.

CUT-IN (stop → run) point = temp setting + offset

CUT-OUT (stop → run) point = temp setting - offset

ex) Temp set 2℃, offset 3℃,

CUT-IN point 2 + 3 = 5[℃] , CUT-OUT point 2 - 3 = -1[℃].

* Temp control run/stop diagram

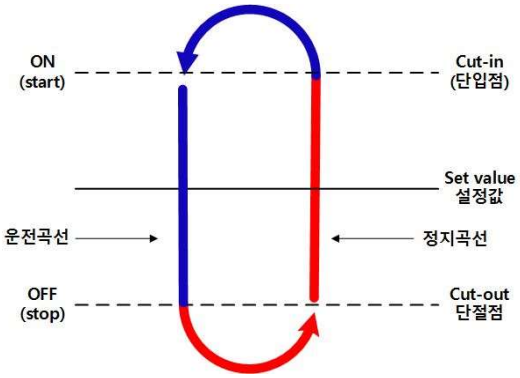

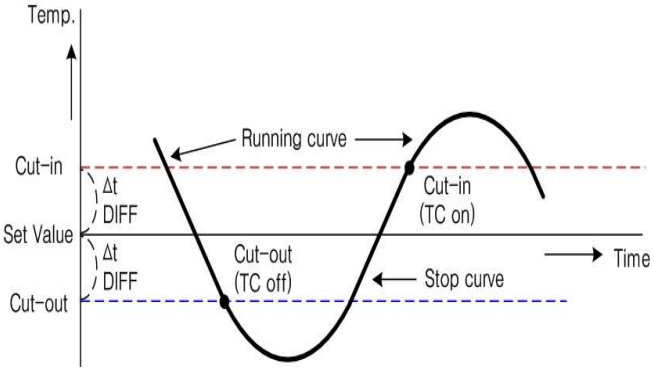

2.Temperature controller setting

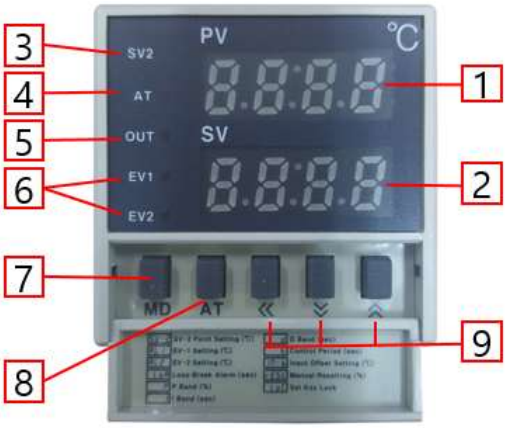

① PV: Measurement display (red)
Displays measured value.
Displays configuration subject in configuration mode.
② SV: Configuration value display (green)
Displays adjusting value.
Displays configuration subject in configuration mode.
③ SV2: SV2 on lamp
④ AT: auto-tuning on lamp
⑤ OUT: output on lamp
⑥ EV1,2: EVENT output display lamp
⑦ MD key: mode key
Press button for 3sec
⑧ AT key: Auto-tuning run key
⑨ ∧ ∨ ≪ : adjustment key

* Method

① Press 《 key to change value during operation.

② Press 《 key to adjust other numbers.

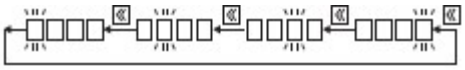

③ Press ∧∨ key to alter each value.

④ Press MD after adjustment.

* Offset

① Press MD key for 3 sec during operation.

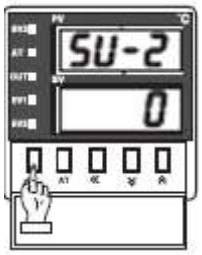

② Check SU-2 on display on PV and press MD 9 times until HYS appears.

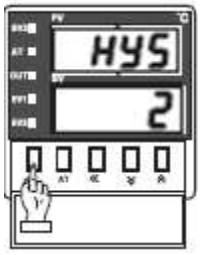 ③ Use ⩓ ⩔ key to adjust offset value (basic: 2℃). Can be adjusted between 1~100℃.	 ④ Press MD to return to operation mode.

※ Caution: Offset [Configuration value ± offset/2] can be varied between operation range.

ex) Configuration temp: 10 , Offset: 4 , In case of low temp control: starting at 10 + 2 = 12 [℃], stopping at 10 - 2 = 8 [℃]

・Check Point

1. Checking tools and materials.
2. Setting the difference as the valves of LPS and explaining the operation principal of it .
3. Configurating circuit of operation with banana jacks using tools and material.
4. Understanding the function of operating circuit.
   ① Explaining the progress when PB1 is pushed.
   ② Explaining the progress that the refrigerator is stoped when pressure at low pressure part goes down on running of compressor motor.
   ③ Explaining the progress that the refrigerator is restarted when pressure at low pressure part goes up on stop of compressor motor
   ④ Explaining the progress that refrigerator starts when PB_2 is pushed.
5. noting and defining distribution and variation of high temperature points

	Appraisal		Allot	Point	Remark			
Relationship between technical description rating items and task	Work (Point 70))	Circuit configuration using banana jack	20					
		Circuit configuration using real wire	20					
		Configuration state	10					
		Understand and description for circuit	20					
	Task (Point 10)	Task attitude and safety	5					
		Application and standstill of tools	5					
	Time (Point 20)	・Demerit mark Point ( ) in every ( ) minute after finish			Work	Task	Time	Total

Experiment name	3-6. Practicing pressure configuration of pressure switch	Class time(hr)
		8
The object of experiment	① Understanding principle of control system of low-pressure switch (LPS) ② To configurate and operate circuit for low pressure control and understand.	

Experiment equipments	Tool & material	Spec of tools	Q'nty
· 4 way reverse valve control heat pump training equipment (KTE-1000MOH)	· Driver · Nipper · Wire Stripper · Hook meter	· #2× 6 × 175mm · 150mm · 0.5~6mm^2 · 300A 600V	1 1 1 1/Group

Control Circuit

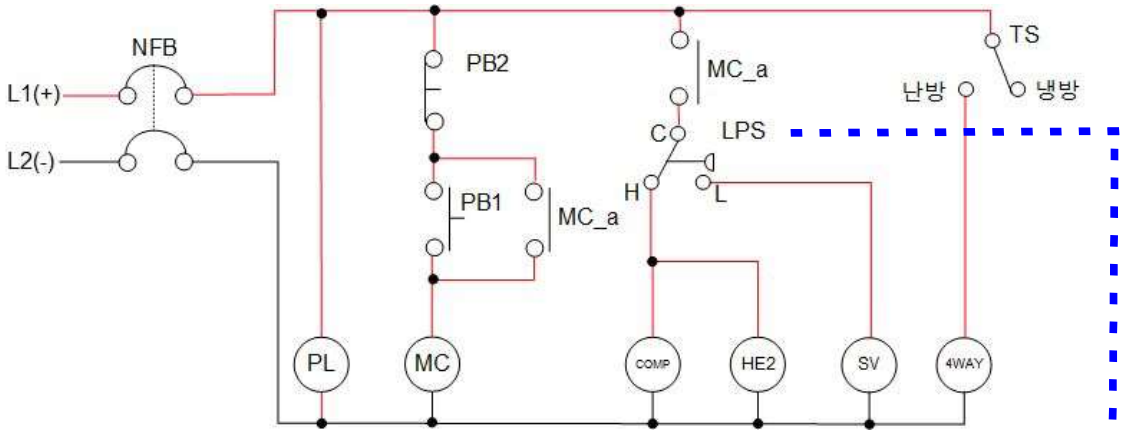

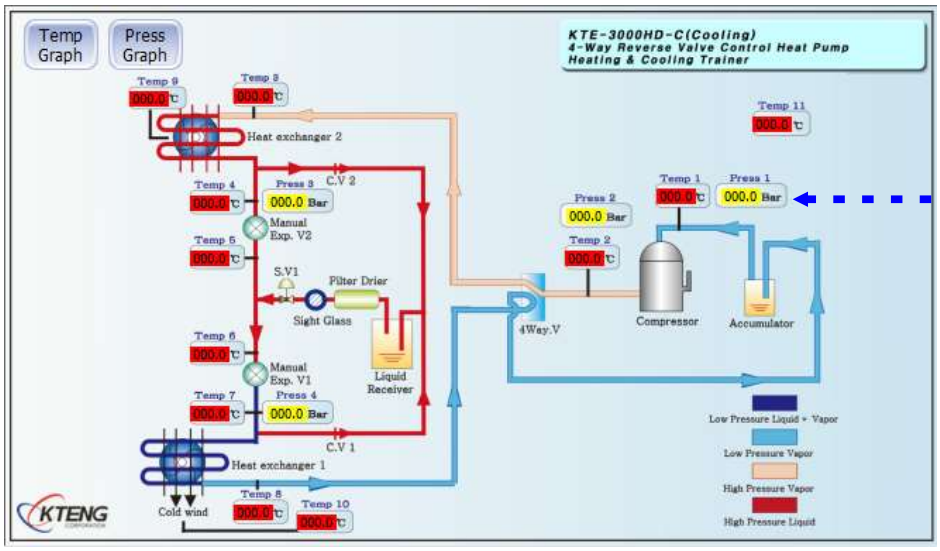

L1, L2 : Line voltage
N.F.B : No-fuse breaker
COMP1 : 1st stage comp
PB : push button
CFM : Condenser fan motor
SV1 : Solenoid valve 1
LPS : Low-pressure switch
MC : Magnetic contact

No.	Cut in P	D.P	Cut out P	Pressure gauge	Remarks
1	3	2	1		
2	3	1	2		
3	4	2	2		

Operating refrigeration on/off cycle upon configurations below.

CUT-IN (stop → run) POINT = configuration pressure

CUT-OUT (run → stop) POINT = configuration pressure - offset

ex) configuration pressure 5, offset 3 [bar]

CUT-IN point 5 = 5[bar] , CUT-OUT point 5 - 3 = 2[bar]

* LPS run/stop curve

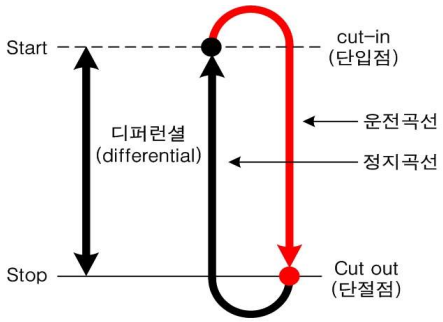

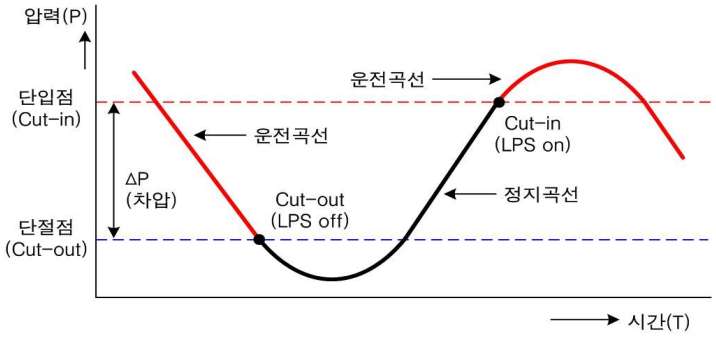

2. LPS setting

* Dual Pressure Switch (DPS)

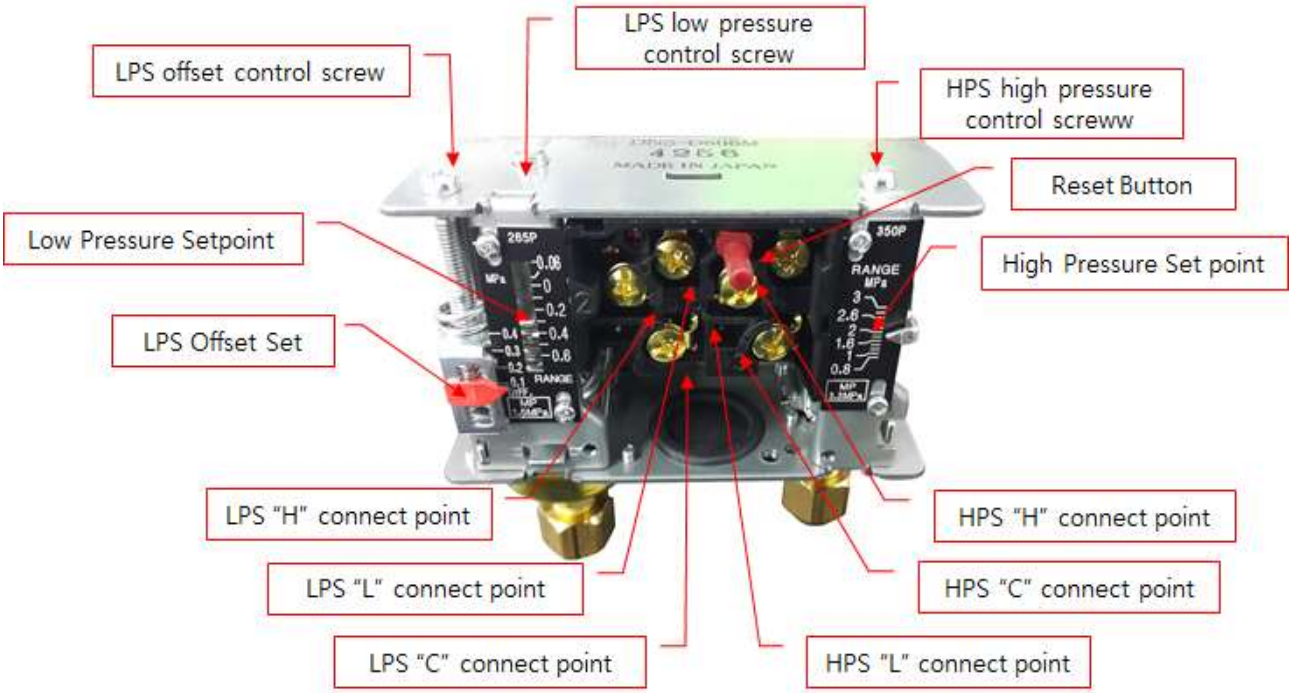

DPS is a multi purpose switch which contains both low-high pressure swtiches.
DPS consist of lever, contact adjust screw and run/stop compressor upon refrigerant pressure.

1) Structure

Referring the figure above, LPS is located below cover of DPS and Hand Pressure Switch (HPS) is located next to itself. There are 3 contact each which is ' C' below the LPS, ' A' above, ' H' , and ' L' (B contact) on the upper side.
LPS contains pressure up/down adjust screw and HPS has manual return structure which lack of down pressure switch.

High/low pressure switch protects the equipment by opening/closing L,H contact upon high/low pressure configuration during equipment operation.

1) L.P.S. method

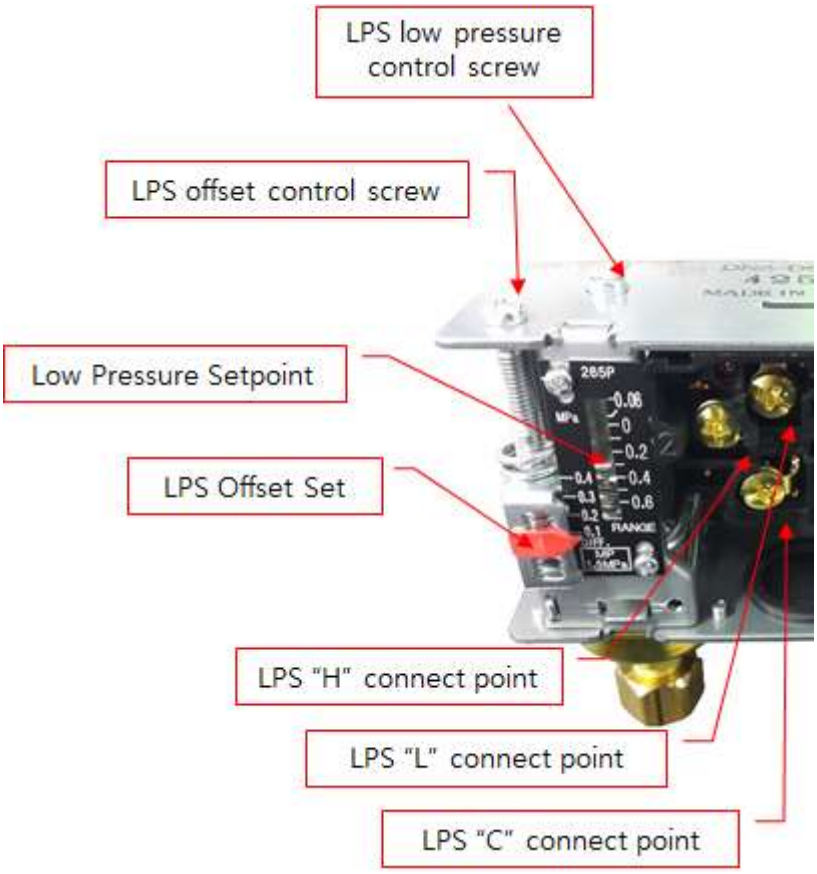

Right gradation: Low pressure (RANGE)

Left gradation: offset(DIFF)

① Adjust low pressure by turning the screw clockwise/anti-clockwise with screw driver(+)

② Also adjust offset by turning the screw clockwise/anti-clockwise with screw driver(+)

③ Apply (+) power on com port and connect to certain port upon configuration (L or H) then connect other side of the cable to Comp (red port) next to DC power input.

④ LPS-L Line OUT (connect to COM -> L line port when pressure drops below configuration pressure)

⑤ LPS-H Line OUT (connect to COM -> H line port when pressure reaches up to configuration pressure)

2) H.P.S. method

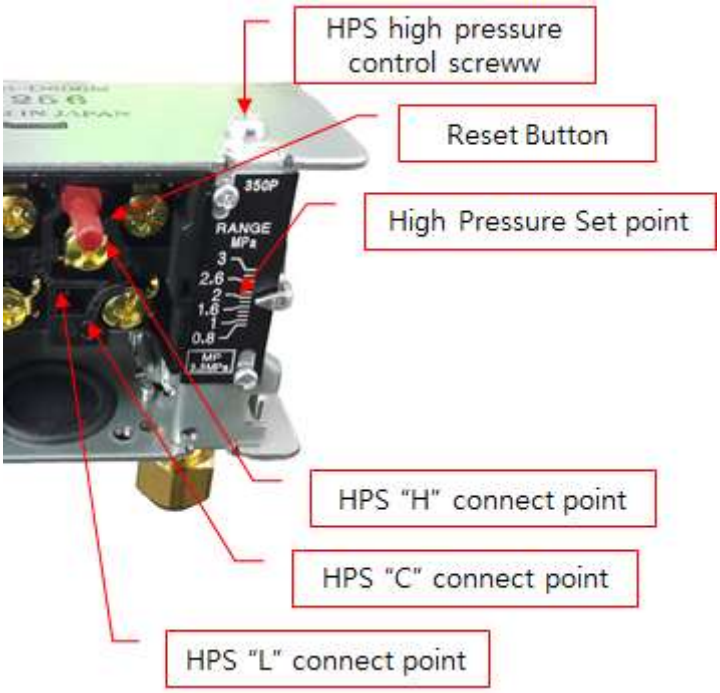

① Adjust high pressure by turning the screw clockwise/anti-clockwise with screw driver(+)

② HPS-L Line OUT (connect to COM -> L line port when pressure drops below configuration pressure)

③ HPS-H Line OUT (connect to COM -> H line port when pressure reaches up to configuration pressure, manual return by reset)

Experiment name	3-6. Practicing pressure configuration of pressure switch	Class time(hr)
		8

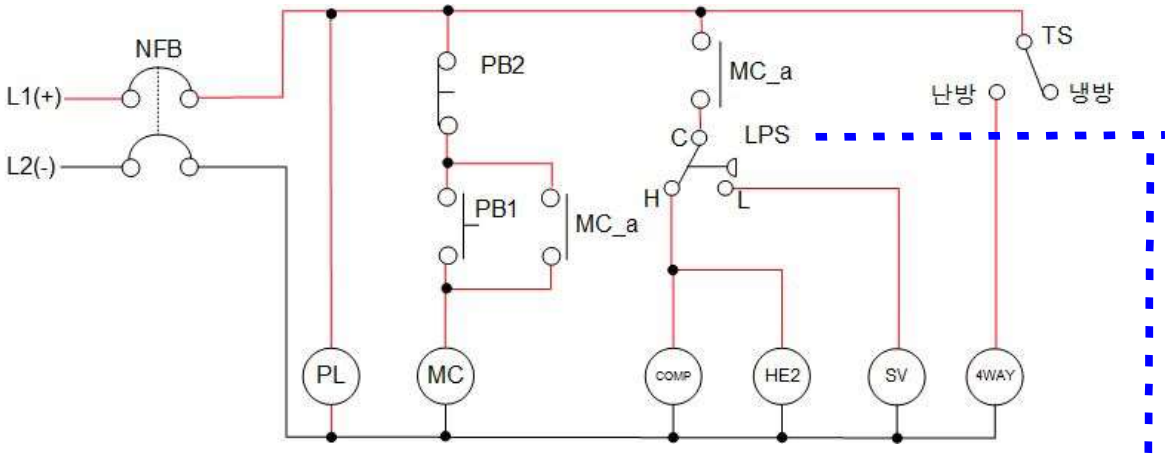

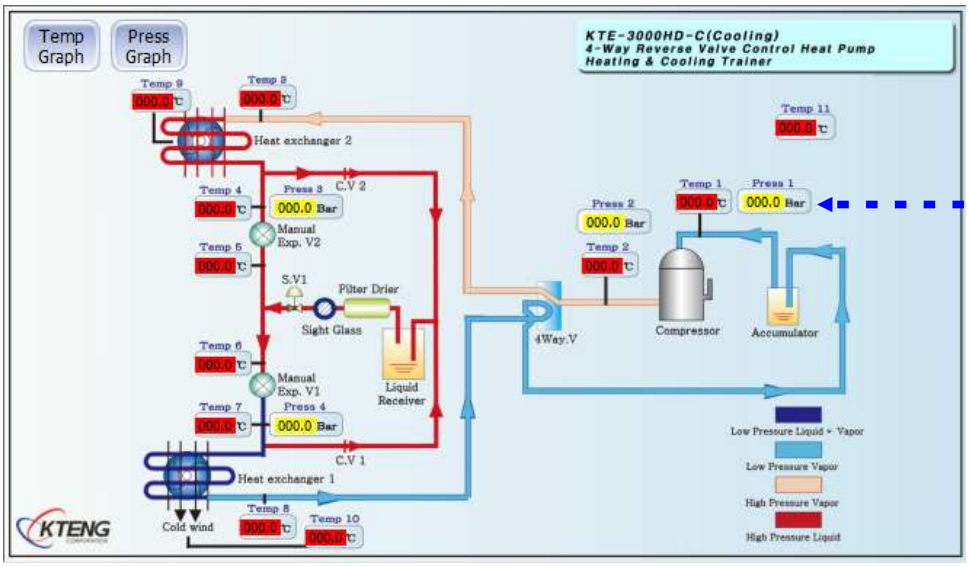

Relationship between technical description rating items and task	Appraisal		Allot	Point	Remark			
	Work (Point 70))	Circuit configuration using banana jack	20					
		Circuit configuration using real wire	20					
		Configuration state	10					
		Understand and description for circuit	20					
	Task (Point 10)	Task attitude and safety	5					
		Application and standstill of tools	5					
	Time (Point 20)	·Demerit mark Point ( ) in every ( ) minute after finish			Work	Task	Time	Total

Experiment name	3-7. Configuration circuit reversing refrigerant flow direction for "heat pump refrigeration system" and operation.	Class time(hr)
		8
The object of experiment	① To understand the principal of reversing refrigerant flow direction using 4-way V/V. ② To configurate manual control circuit of the system. ③ To understand the principal of cooling operation and heating operation of the system and operate reversing each system.	

Experiment equipments	Tool & material	Spec of tools	Q'nty
· 4-ways reverse V/V heat pump trainer(KTE-1000MOH)	· Driver · Nipper · Wire Stripper · Hook meter	· #2× 6 × 175mm · 150mm · 0.5~6mm^2 · 300A 600V	1 1 1 1/Group

Control Circuit

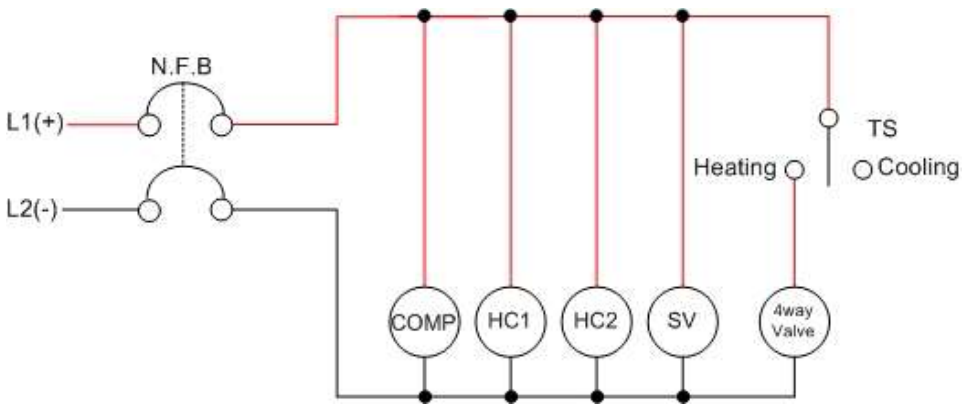

L1, L2 : Line Voltage
N.F.B : Nofuse circuit breaker
HC1 : 1 Heat Exchanger Fan Motor
HC2 : 2 Heat Exchanger Fan Motor
SV : Solenoid V/V
4way valve : Reversing V/V
TS : Toggle S/W
COMP : Compressor Motor

[Related Theory]

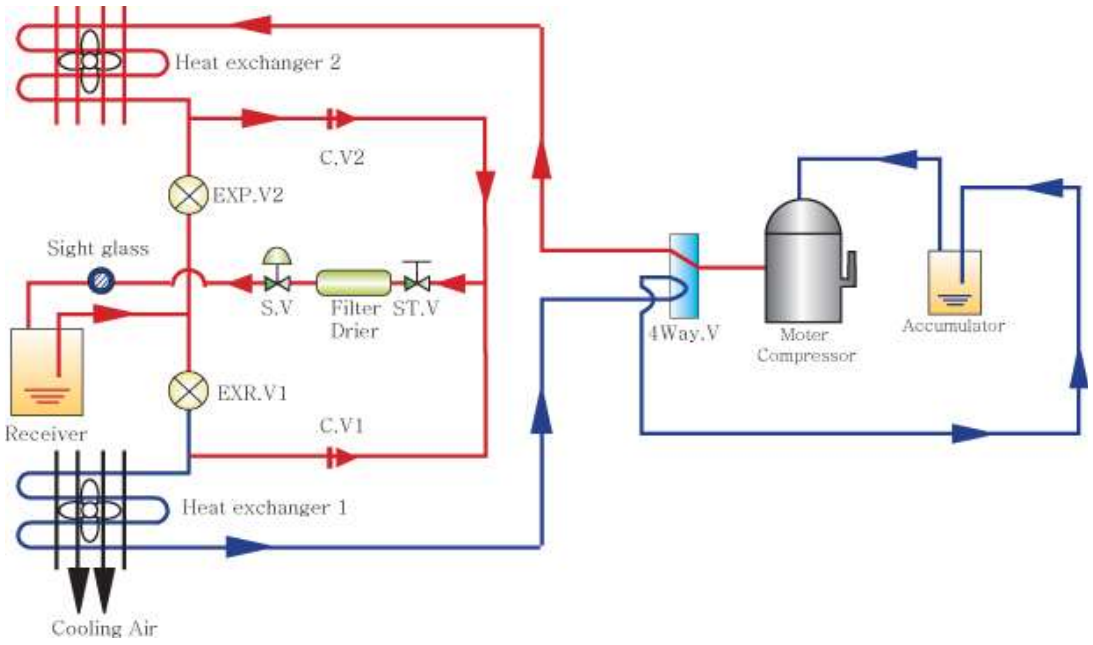

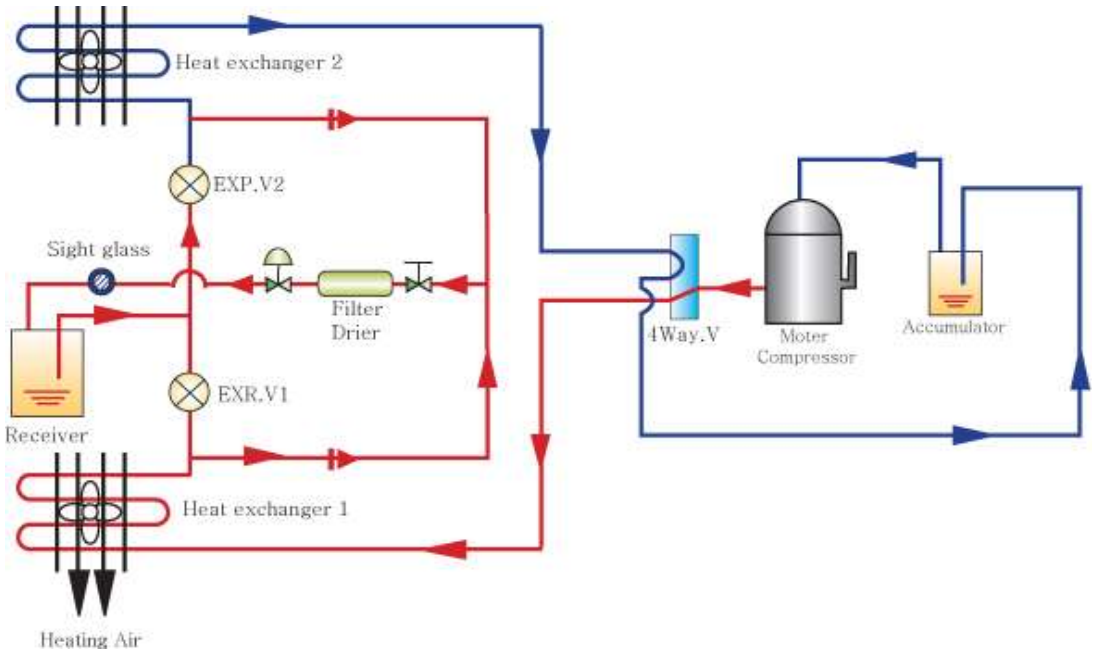

COMP : Compressor Motor

HC1 : Heat Exchanger1

HC2 : Heat Exchanger2

S.V : Solenoid Valve

4-Way.V : 4-Way Reversing Valve

· Check Point

1. Set a heat pump using 4-ways reversing V/V cooling, heating refrigeration trainer, and check electric state and refrigerant charging state.
2. Understand the function of operating circuit.
   ① Explain the progress that refrigerator starts when NFB is on.
   ② Explain the principal of heating cycle comparing with cooling cycle when TS(Toggle S/W) reverses.
   ③ Explain the principal of cooling cycle comparing with heating cycle when TS(Toggle S/W) reverses.
3. Explain the function of 4-ways reversing V/V.
4. Configurate circuit using banana jacks and operate using banana jacks with experiment equipments, tools and materials.
5. Configurate circuit using real wires(KTE-4000SQ) and operate using banana jacks with experiment equipments, tools and materials.

Relationship between technical description rating items and task	Appraisal		Allot	Point	Remark			
	Work (Point 70))	Circuit configuration using banana jack	20					
		Circuit configuration using real wire	20					
		Configuration state	10					
		Understand and description for circuit	20					
	Task (Point 10)	Task attitude and safety	5					
		Application and standstill of tools	5					
	Time (Point 20)	· Demerit mark Point ( ) in every ( ) minute after finish			Work	Task	Time	Total

Experiment name	3-8. Configuration manual control circuit for "cooling and heating heat pump refrigeration system" and operation.	Class time(hr)
		8

The object of experiment	① To explain and understand the motion of manual control circuit for "cooling and heating heat pump refrigeration system". ② To configurate self-holding circuit for "cooling and heating heat pump refrigeration system using 4-ways reversing V/V". ③ To make wiring self-holding circuit for "cooling and heating heat pump refrigeration syste musing 4-ways reversing V/V".

Experiment equipments	Tool & material	Spec of tools	Q'nty
· 4-ways reverse V/V heat pump trainer(KTE-1000MOH)	· Driver · Nipper · Wire Stripper · Hook meter	· #2× 6 × 175mm · 150mm · 0.5~6mm^2 · 300A 600V	1 1 1 1/Group

Control Circuit

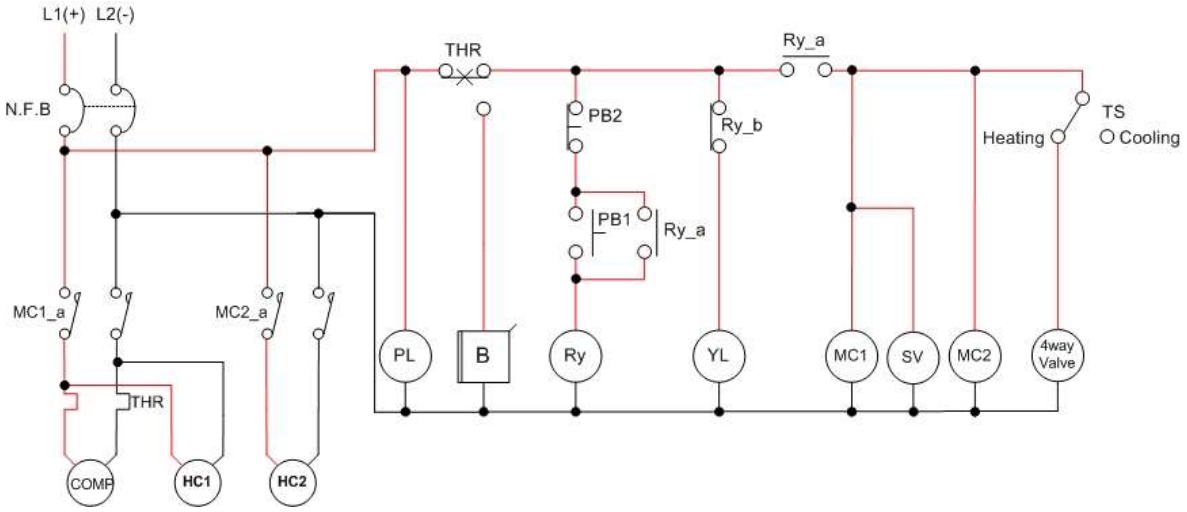

L1, L2 : Line Voltage
N.F.B : No fuse circuit breaker
MC-a : MC "a" contact
THR : Thermal Relay
COMP : Compressor Motor
YL : Yellow Lamp

PB : Push Button S/W
SV : Solenoid V/V
Ry-a : Relay"a"contact
Ry-b : Relay"b"contact
TC : Temperature control S/W
MC : Magnetic Contactor Coil

B : Buzzer
TS : Toggle S/W
4way valve : reversing V/V
HC1 : 1 Heat Exchanger Fan Motor
HC2 : 3 Heat Exchanger Fan Motor
PL : Power Lamp

· Check Point

1. Set a heat pump using 4-ways reversing V/V cooling, heating refrigeration trainer, and check electric state and refrigerant charging state.
2. Understand the function of operating circuit.
   ① Explain the progress when PB1 is pushed.
   ② Explain the process of heating operation when TS is reversed to heating operation during the system running.
   ③ Explain the process of cooling operation when TS is reversed to cooling operation during the system running.
   ④ Explain the progress that refrigerator starts when PB_2 is pushed.
3. Configurate circuit using banana jacks and operate using banana jacks with experiment equipments, tools and materials.
4. Configurate circuit using real wires(KTE-4000SQ) and operate using banana jacks with experiment equipments, tools and materials.

Relationship between technical description rating items and task	Appraisal		Allot	Point	Remark			
	Work (Point 70))	Circuit configuration using banana jack	20					
		Circuit configuration using real wire	20					
		Configuration state	10					
		Understand and description for circuit	20					
	Task (Point 10)	Task attitude and safety	5					
		Application and standstill of tools	5					
	Time (Point 20)	· Demerit mark Point ( ) in every ( ) minute after finish			Work	Task	Time	Total

Chapter 4. Notice and Guarantee

1. Mechanical trouble and measures

1-1. When the Power lamp does not connect

(1) If the power lamp do not work when the N.F.B turn on. Please check inserts a power cord in the reverse side of N.F.B or installation in power input.

CHECK AC LAMP is on

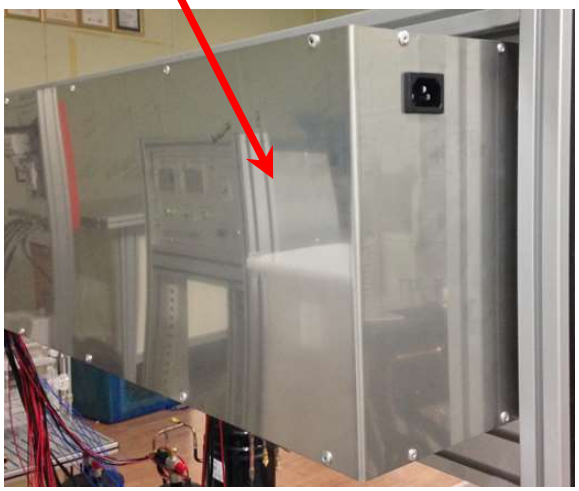

N.F.B installed Back Sight

Check the AC LAMP is turn on

Installed the N.F.B on reverse side of control panel

① Check the power cord is put in on reverse side.

② Check the power cord is plug in.

2. Caution Notice on operation

2-1. Power Supply

(1) Main power of this equipment is use a single phase AC 220V.

(2) After equipment action order turns on N.F.B and watches circuit diagram and finishes wiring by RCA cable in proposition that power cord was counted, DC toggle switch does on.

(3) Use RCA cable and power supply at equipment operate secures because use DC 24V, but should observe to +, - mixing use of monad as operating power is DC.

(4) Also, base and control panel of equipment is all aluminum quality of the material when interlink red + terminal, should take care not to reach in aluminum base.

2-2. Machine Equipment

(1) When using a charging nipple installed at low pressure and high pressure side of, notice refrigerant not to leak.

(2) Use after making sure how to use well exactly operating a manual expansion valve .

(3) When going out of factory, super heating and sub cooling are set up 5±2℃, but as your continue using the setting value will be changed.

(4) Notice fragile arcrylic duct of evaporator for visual inside. Be careful not to break it.

(5) If you separate any component of product by yourself, the system gets damage and you never get A/S from us.

2-3. Data Acquisition device and Software

(1) After set up circuit of electric panel on the main equipment, connect Data Acquisition device and computer. Check if the cable is connected correct, turn on the switch on panel.(* Please follow step by step as manual book.)

2-4. Else

(1) After reading the manual book, operate the system.

(2) If you have any question, call us.

◎ **Warrantee and A/S application sheet**

Product Warrantee Certification

Fill out this sheet, and send by Fax or E-mail..

MODEL		
WARRENTEE TERM	1 YEAR	
PURCHASING DATE	(M/D/Y)	
ORGANIZATION	**SCHOOL**	
	DEPARTMENT	

TEL : +81-31-749-5373 | FAX : +81-31-749-5376 | kteng@kteng.com | http://www.kteng.com
HEAD OFFICE : 601 postechno B/D, 234-1 sangdeawon-dong jungwon-gu, seongnam-si, gyeonggi-do, KOREA 462-120
Factory : 133-1 Shinhyen-ri opo-eup, gwangju-si, geonggi-do, KOREA 464-895

Educational lab equipment training programs

KTE-101 : Standard Refrigeration System Experiment Practical Course
KTE-102 : Refrigerant Parallel Valve Automatic Control Experiment Practical Course
KTE-103 : E.P.R(Evaporation Pressure Parallel Control) Refrigeration Experiment Practical Course
KTE-104 : Heat Pump System Performance Experiment Practical Course
KTE-105 : Cryogenic Cold & Heat(Dual Refrigeration) System Performance Experiment Practical Course
KTE-106 : Brine Refrigeration(Ice-storage Refrigeration) System Performance Experiment Practical Course
KTE-107 : Vehicular Heating and Cooling Performance Experiment Practical Course
KTE-108 : Air-conditioning System Performance Experiment Practical Course
KTE-109 : Chiller Method Air-conditioning System Performance Experiment Practical Course
KTE-201 : Solar・Wind Power Control Basic Circuit Configuration Practice
KTE-202 : Solar Generation Test Practice
KTE-203 : Solar System Equipment Configuration Practice
KTE-204 : Wind Power Generation Test Practice
KTE-205 : Solar・Wind Power Hybrid Generation Practice
KTE-206 : Hydrogen Fuel Cell Generation Practice
KTE-301 : Solar Radiant Energy Measurement Practical Experiment
KTE-302 : Solar Hot water boiler Performance Practical Experiment
KTE-303 : Geothermal Heat Pump Cooling & Heating Practical Experiment
KTE-304 : Solar-Thermal Combined Geothermal System Practical Experiment
KTE-401 : LED Basic Theory & Performance Assessment Practice
KTE-402 : LED Application System Configuration Practice
KTE-403 : LED Lighting Equipment Practice
KTE-404 : LED Media Facade Lighting Practice
KTE-405 : LED Luminescent property analysis Experiment
KTE-406 : OLED Unit Element Characteristic Evaluation Experiment
KTE-501 : PLC Automation Control Practice Basic
KTE-502 : PLC Automation Control Practice Intermediate
KTE-503 : PLC Automation Control Basic Advanced
KTE-601 : Sequence Control Practical Basic Course
KTE-602 : Sequence Control Practical Intermediate Course
KTE-603 : Sequence Control Practical Advanced Course
KTE-701 : Power Equipment Basic Course
KTE-702 : Power Equipment Intensive Course
KTE-901 : Water-based Fire Extinguishing Equipment
KTE-902 : Gas Fire Extinguishing Equipment
KTE-903 : Alarm Equipment
KTE-904 : Fire Extinguisher
KTE-905 : Evacuation Equipment
KTE-1101 : Robot Control Practical Basic Course
KTE-1102 : Robot Control Practical Intermediate Course
KTE-1103 : Robot Control Practical Advanced Course
KTE-1201 : Welding Machine Practical Basic Course
KTE-1202 : Welding Machine Practical Intermediate Course
KTE-1203 : Welding Machine Practical Advanced Course
KTE-1301 : Basic Pneumatic Practice
KTE-1302 : Electro-pneumatic Basic Practice
KTE-1303 : Electro-pneumatic Intermediate Practice
KTE-1401 : Automatic Control Mechatronics Basic Practice
KTE-1402 : Automatic Control Mechatronics Intermediate Practice
KTE-1403 : Automatic Control Mechatronics Advanced Practice

Renewable Energy / Refrigeration & Air-conditioning & Welding
Automation controls(PLC) / Robot controls / Electric & Electronics(LED lighting)
Firefighting & safety / Big data & ICT / Automobile & ship / Nano chemical

3E EDUCATION ENGINEERING ENVIRONMENT

KTENG CORPORATION

KTENG Co., Ltd.
TEL: 82-31-749-5373 | FAX: 82-31-749-5376
overseas@kteng.com | http://www.kteng.com
11, Meorusut-gil, Opo-eup, Gwangju-si,
Gyeonggi-do, 12771, South Korea