Model : KTE-7000SB

SOLAR HEATING HOT WATER BOILER EXPERIMENT EQUIPMENT USAGE MANUAL Ver.2.0.0

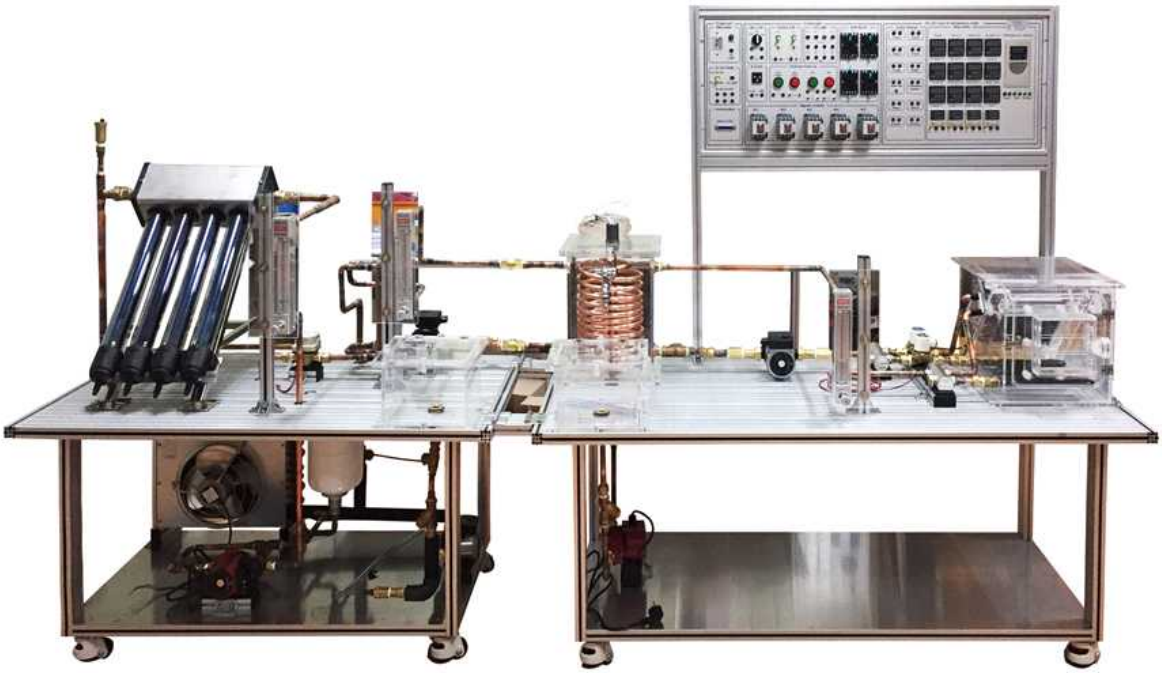

Korea Technology Institute of Energy Convergence

Korea Technology Engineering Co.,Ltd.

CONTNET

1. Test Equipment for Solar Energy Hot Water Boiler

1-1. Introduction

Sun holds an infinite amount of energy. Amount of energy the Earth receives from the Sun is incalculably large and the energy will be sustained as long as the Sun exists. 2.4×1015kcal/min or 1.7×1014kW of energy from the Sun is reflected on the atmospheric layer of the Earth and about 35% of the stated amount is reflected out on the atmosphere, 18% is absorbed into the atmosphere, causing wind, and about 47% reaches the actual surface of the Earth.

The solar heat systems can be divided into a passive system and an active system, depending on the existence of a driving gear on the thermal medium. The former mainly uses building constructions, such as greenhouse, south-facing windows and flat screen, to collect and use solar heat. The latter is the so-called solar energy system and it uses a driving gear of the thermal medium, such as pump, by installing a separate energy collector, to collect solar energy.

KTE-7000SB (Solar energy hot water test equipment) is an active system, described above. It uses the solar energy collecting technology, thermal storage technology and system control technology. The system allows its users to easily understand the principles of heating, cooling and hot-water supply in building through absorption, storage and conversion of solar energy. Moreover, users can test performances of the 3 different types of heat exchanger (Pin, Fan and Coil types) with different ways of heat exchange.

The Sun is the most natural and sustainable energy source, which is critically important now, when there is a global insufficiency of energy and rising importance of the new reuseable energy. Thus, KTE-7000SB (Solar energy hot water test equipment) is an equipment that allows the easiest understanding on the heating and hot-water system using the solar energy.

2. Components of the Equipment

2-1. Description of the major parts

〔Fig 2.1〕 Solar Energy Collector

(1) Solar Energy Collector

1. Name: Solar energy collector
2. Type: Flat plate
3. Specification: 400 x 600 x 100 mm
4. The solar energy collector effectively collects the radiant energy from the Sun. It consists of a clear cover, heat absorber plate and insulator.

〔Fig 2.2〕 Thermal Storage Tank

(2) Thermal storage Tank

1. Name: thermal storage tank
2. Material: Acrylic
3. Heater capacity: 1 kW
4. The thermal storage tank stores heat collected from the collector so that the heat can be converted into a useful energy later.

〔Fig 2.3〕 Temperature Controller

(3) Temperature Controller

1. Name: Temperature controller (Automatic temperature controlling instrument)
2. Model: SU-1133D
3. Characteristic
   A. Temperature range for each sensor: IC(-50℃~150℃)
   B. Output: temperature output, forward/reverse output
   C. Power: AC220V
   D. Electricity consumption: approx. 5VA or lower
   E. Controlled output: Relay contact output (AC250V, 5A)
   T. Control: temperature ON/OFF
4. Name and functino of each part

Measured values (PV)	Indication of the value measured using the sensor		
Set values (SV)	Indication of the values set for main output		
Indication of output	*		Show temp. output cooler operation
	♨		Show temp. output heater operation
	RY		Show temp. output ON/OFF
	PRO		Show aux. output ON/OFF
Operation keys		set	Mode selection setting button
		up	Setting value increasing button
		dn	Setting value decreasing button
		pwr	Main/aux. output force ON/OFF button

(4) Heat exchanger 1 and For prevent overheating

〔Fig 2.4〕 For prevent overheating

Condenser is a device that condenses a high pressure and temperature refrigerant discharged from compressor into liquid by extracting heat of the refrigerant to outside air or cooling fluid e.g. cold water. The reason we make it into liquid phase is to utilize the potential heat when the phase changes. In order to absorb the heat from evaporator, the best performance comes out when using potential heat, that is, when it changes from liquid phase to gas phase.

〔Fig 2.5〕 Modified Inside Building (For load)

1. Power : DC24V, 1.2A
2. Capacity : 1/4HP
3. Size : 400×250×250mm
4. Fan speed controll
5. Fan type heat exchanger role is that sending warm air into the room by release boiling water on solar collector into the constant temperature air.

   This device is for release heat source through exchanging between cold air and warm water which was supplied from heat storage or boiler system.

〔Fig 2.6〕 Plate type heat exchanger (Blazing Type)

(6) Plate Type Heat Exchanger (Brazing Type)

1. Type: Plate type heat exchanger (water-to-water)
2. Capacity: 10,000 kcal/h
3. Specification: 80 × 35 × 190mm
4. The heat exchanges high temperature collected in the heat collector with the low temperature inside the heat tank. The primary heat source is the heat collecting medium, which uses antifreeze substance to prevent freezing in winters, and the secondary heat source is water, which is used as hot water and heating water.

〔Fig 2.7〕 Hot Water Pump

(7) Hot Water Pump

1. Name: Water pump
2. Flux: Max. 60m3/h
3. Lift: Max. 16 m
4. Temperature: -10 ~ 120℃
5. 3 Functional Modes: Mode1 35W, Mode2 65W, Mode3 115W
6. The hot water pump functions as a driving gear that circulates the water through pipes in the solar hot water boiler system.

〔Fig 2.8〕 Pressure Pump

(8) Pressure Pump

1. Name: Pressure pump
2. Flux: Max. 1.8 m3/h
3. Lift: Max. 9m
4. 3 functional modes available
5. The pressure pump supplies water from the make-up water tank to system pipes when there is a lack of circulating water inside the solar hot water boiler system.

[Fig 2.9] Flow Meter

(9) Flow Meter (Hot Water Meter)

1. Name: Small area-based flow meter
2. Model: APF-2
3. Characteristic
   A. Measured substance: Liquid
   B. Flux: 10 ~ 100 l/h
   C. Max. pressure: 8kgf/cm2G
   D. Max. temperature: 90℃
   E. Degree: ±3%(FS)
4. You can set the flux value to be measured by rotating the controller on area-based flow meter.

[Fig 2.10] Air Vent

(10) Air vent

Once air remains inside the pipes, it disturbs flow of water and vapors as well as significantly deteriorates the performance of radiator. Thus, the air vent discharges air from the top of the pipe.

[Fig 2.11] 3-Way Electric Valve

(11) 3-Way Electric Valve

1. Name: 3-way electric valve
2. Model: STV-300
3. Characteristics

The 3-way electric valve is used to tightly close or open the flow ways in both directions and it functions as a convertor of the heating water inside water tank or boiler.

3. Data Acquisition device between PC and machine

3-1. Data Acquisition and System Monitoring Program

3-1-1. Function

(1) Monitoring the measured data of temperature and pressure in real time.

(2) Monitoring the measured data of enthalpy on a diagram of Standard refrigeration system in real time.

(3) Monitoring factors like as refrigeration effect, compressor work, condensing heat in condenser, evaporating latent heat, coefficient of performance in the abstract with temperature and pressure data which are measure in real time

(4) Being saved data all of temperature, pressure and enthalpy on every second as excel

(5) Experiment for variety of condensation temperature(Subcool) on second cycle as change of evaporation temperature on first cycle.

(5-1) Experiment for variety of condensation pressure on second cycle as change of evaporation temperature on first cycle.

(6) Experiment for variety of evaporation temperature(Superheat) on first cycle as change of evaporation temperature on first cycle.

(6-1) Experiment for variety of evaporation pressure on first cycle ass change of evaporation temperature on first cycle.

(7) Check the COP as change of evaporation temperature on first cycle.

3-1-2. Composition

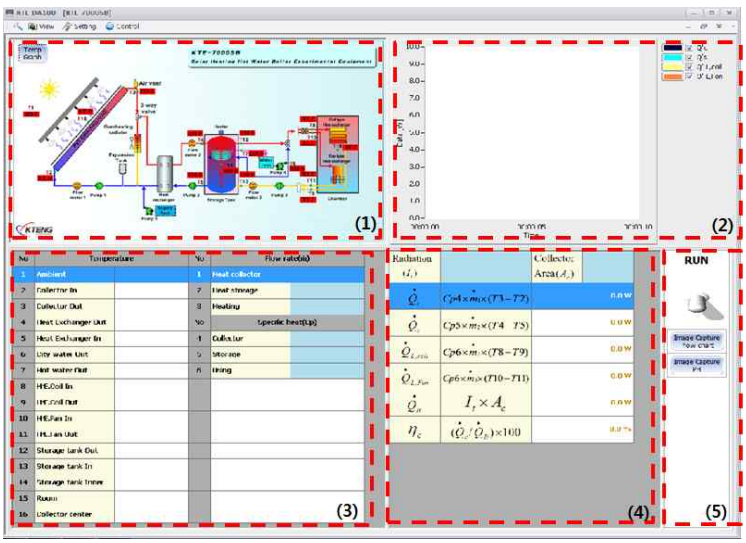

(1) Schematic diagram of equipment.

(2) p-h diagram.

(3) Data table for temperature, pressure and enthalpy.

(4) Sort of Calculation value like as COP, cooling capacity and heating capacity.

(5) Start switch and capture button

3-1-3. Being registered with KoreaSoftwareCopyrightCommittee.

3-2. Install and how to use KTE-DA100

3-2-1. INSTALL USB TO SERIAL

- Communication method is using computer and RS232 protocol for communication.
- If you got a desktop which is connected with Serial Port back. you don't have to install USB To Serial.
- If you got a desktop which doesn't have notebook or Serial Port, you need to install progress for collecting data using USB Port.

1. Run Windows 7
2. Connect USB MultiPort to your PC's USB port.
3. Inset media CD(provided with MultiPort) into the CD drive.
4. Click "Hardware and Sound" in "Control Panel"

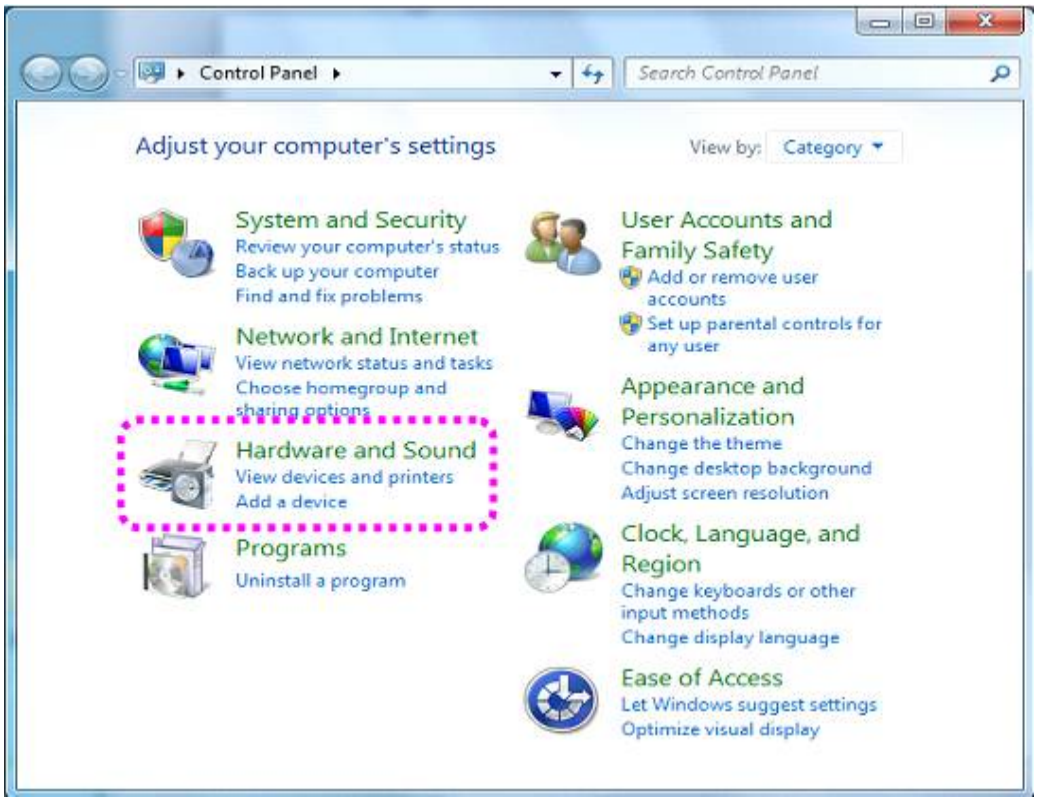

5. Following picture depicts Device Manager after carrying out step 4. Click “Device Manager”.

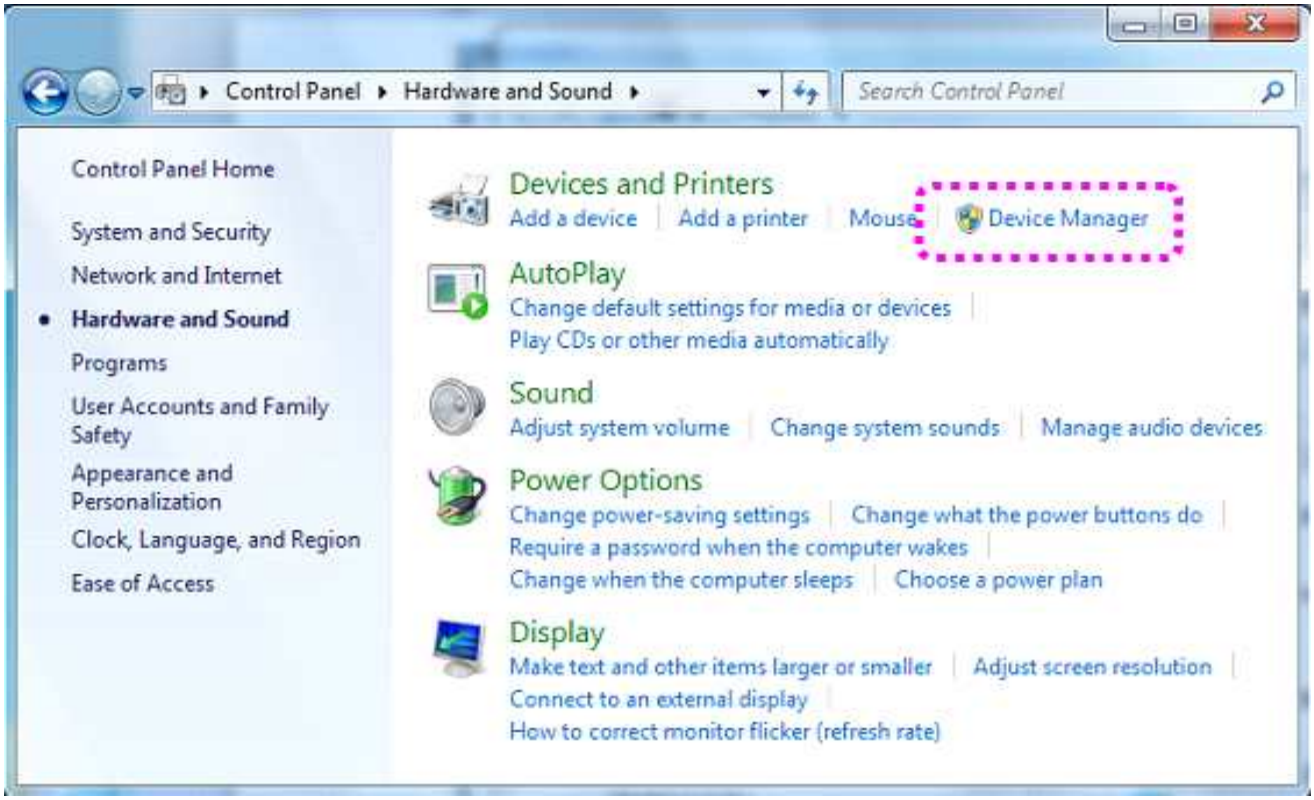

6. Right click “USB <-> Serial Cable” in “Device Manager”. Then choose “Update Driver Software”.

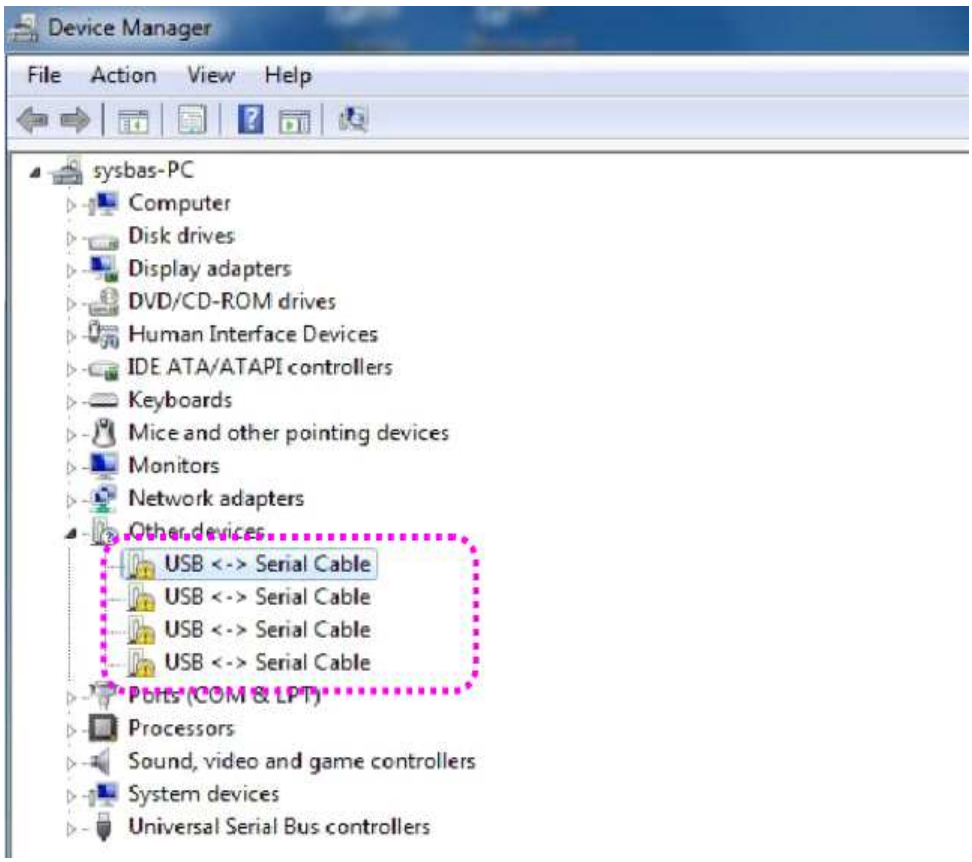

7. Click “Browse my computer for driver software”in order to install driver manually.

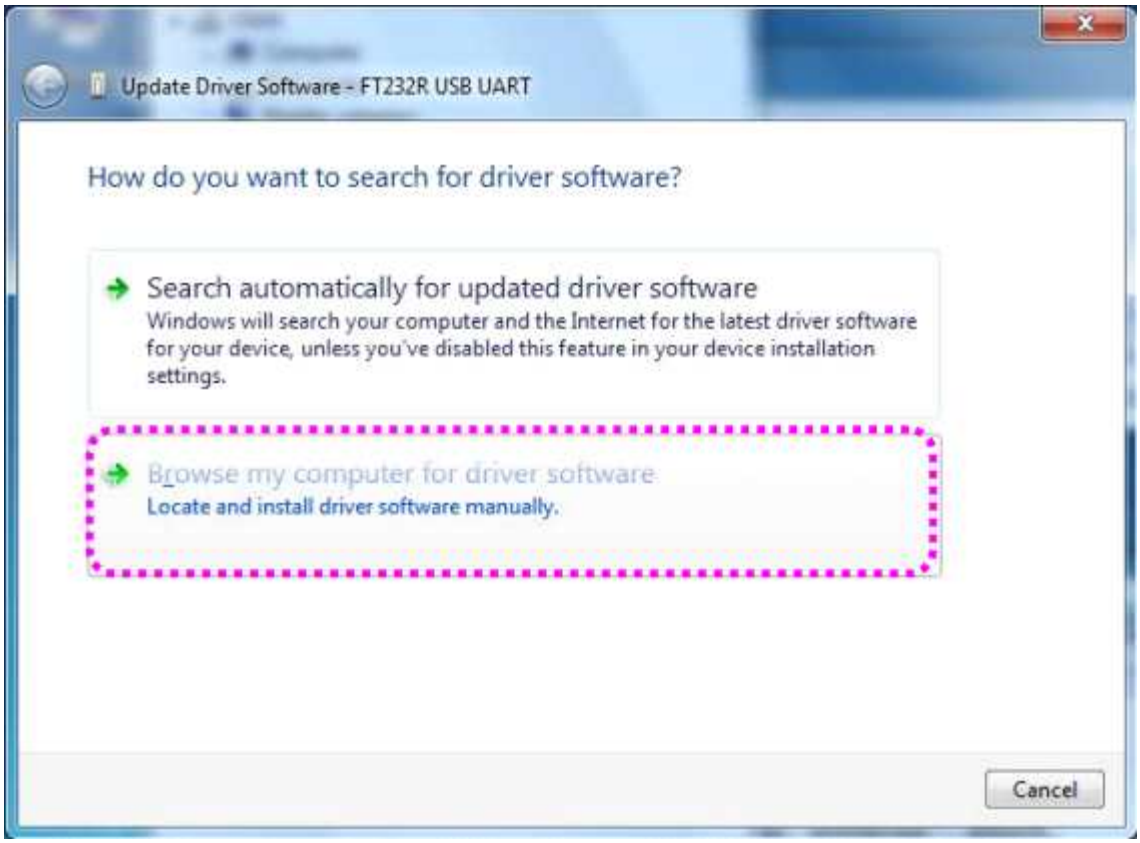

8. Click "Browse"and set driver software's location to [CD]:\Driver\USB\Win2000\,XP,2003,Vista,2008,7".

9. Confirm that "USB Serial Converter" is installed normally. Then, right click "USB Serial Port"and follow the same process from number 6 again.

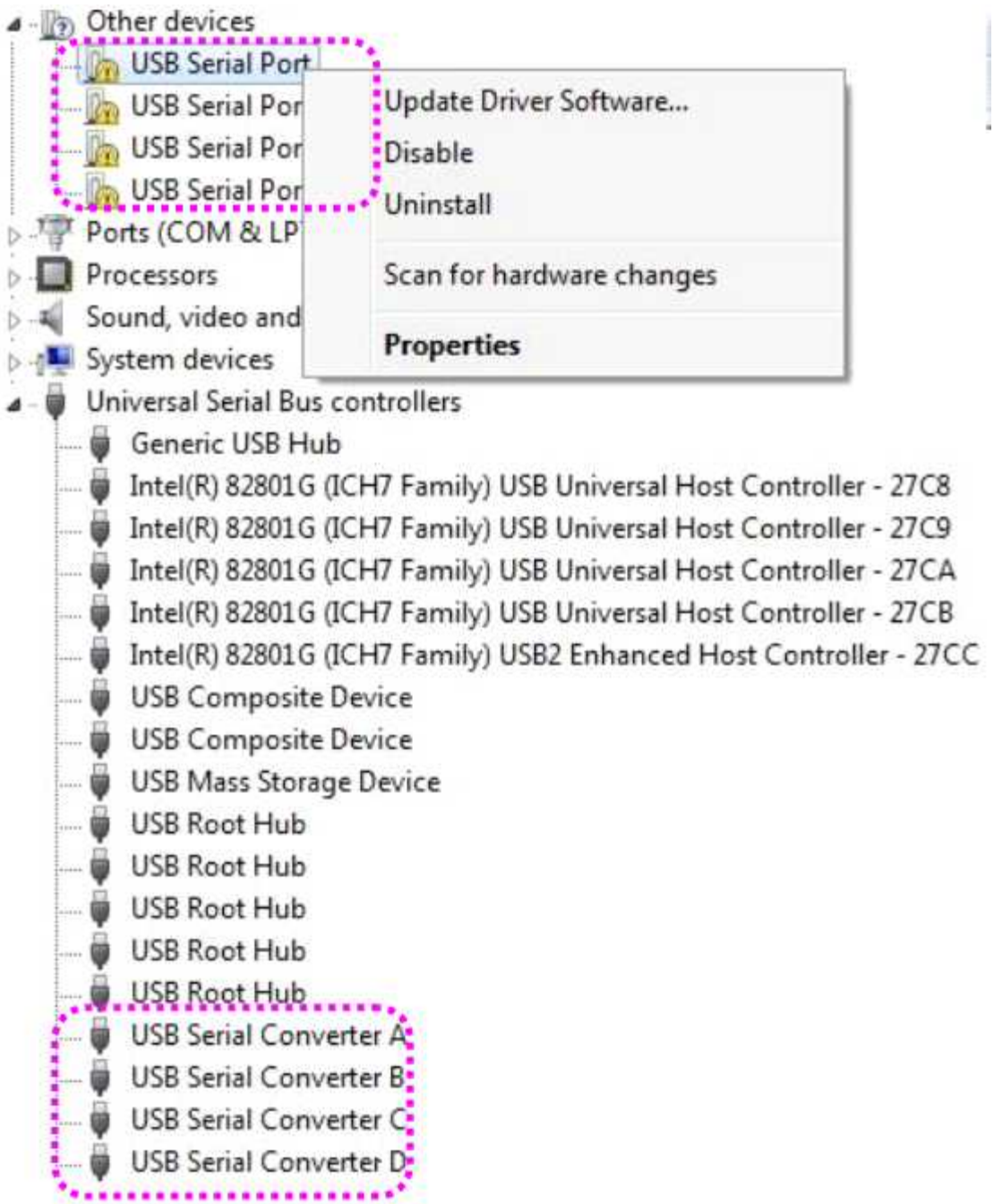

10. Following picture depicts “Device Manager”after carrying out all steps. As can be seen, all “USB Serial Converters” and“USB Serial Ports” are successfully installed.

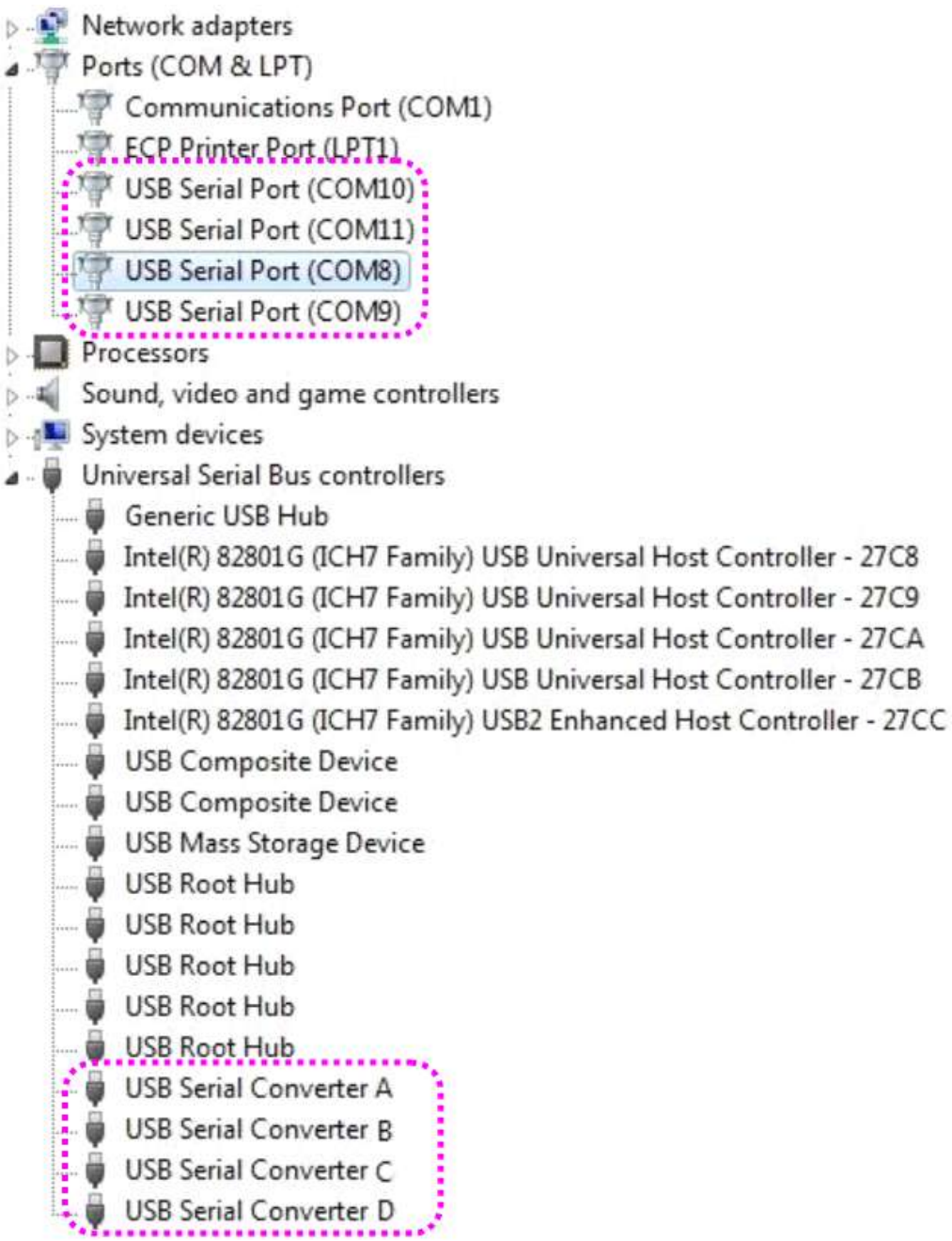

11. “USB Multiport”installation on Window 7 is now finished.

3-2-2. KTE-DA100 Installation and Operating

① KTE-DA100 Installation

1) You can see a installation files that in CD or USB for installation then double click 'KTENG Setup' file to start installation. If the program cannot be installed using 'KTENG Setup', try to 'setup'file.

2) If you can see a 'Setup Wizard' screen, click the 'Next>'.

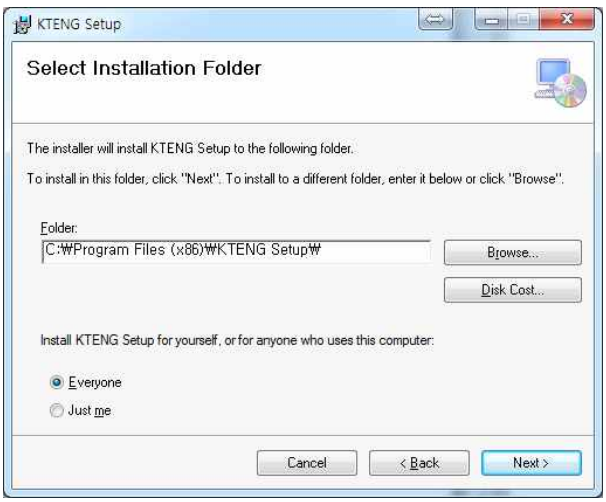

3) You can change a installation route. If you want to change a installation route, click the 'Browse..' and find a new route then click the 'Next>'.

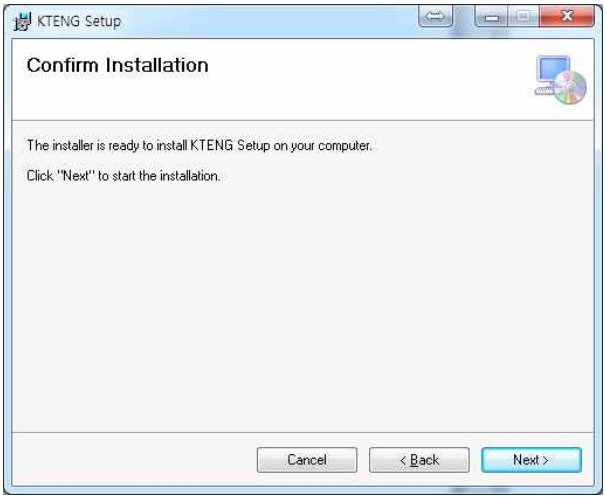

4) It require to confirm installation intention. Please click the‘Next>’.

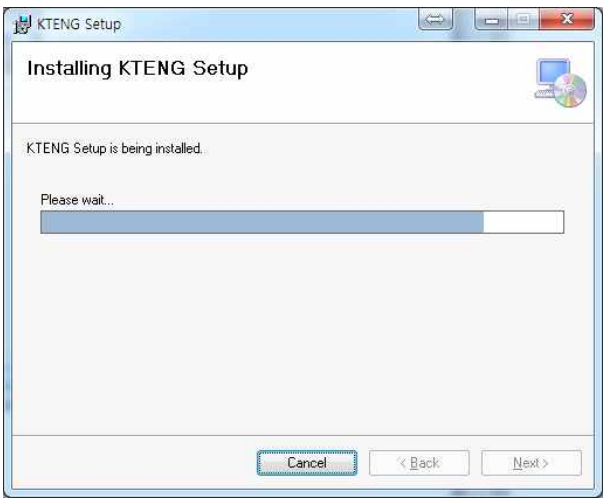

5) Installing a program.

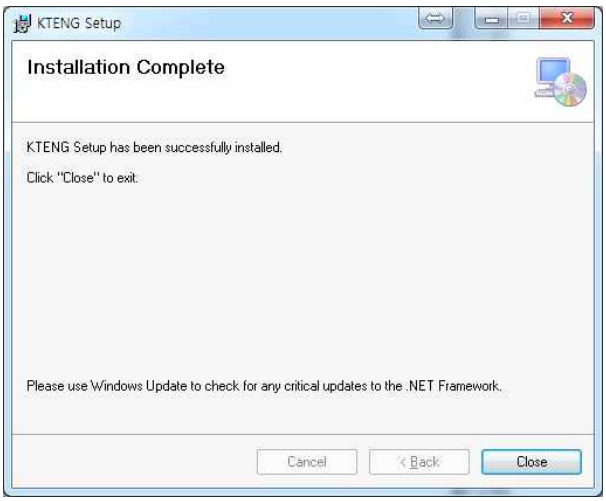

6) Please click the ‘Close’ and complete a installation.

5) Start program by using icon in wallpaper or routing folder then the main page of program come up.

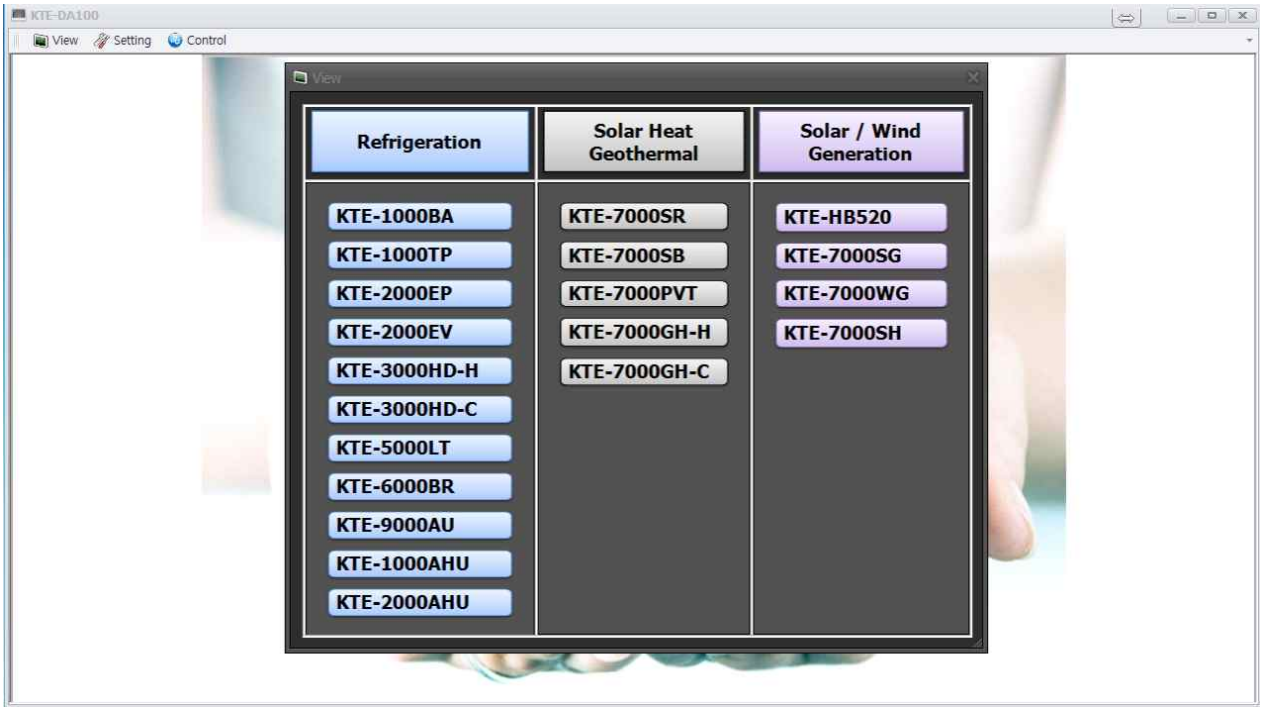

KTE-1000BA	Standard Refrigeration Experimental Equipment	KTE-7000SR	Solar Radiation Energy Experimental Equipment
KTE-2000EP	Evaporation Pressure Parallel Control Experimental Equipment	KTE-7000SB	Solar Heating Hot Water Boiler Experimental Equipment
KTE-2000EV	Refrigerant Parallel Expansion Valve Experimental Equipment	KTE-7000PVT	PVT Performance Measuring Equipment
KTE-3000HD-H	4-Way Reverse Valve Control Heat Pump Experimental Equipment (Heating Mode)	KTE-7000GH-H	Geothermal Heat Pump Experimenatl Equipment (Heating Mode)
KTE-3000HD-C	4-Way Reverse Valve Control Heat Pump Experimental Equipment (Cooling Mode)	KTE-7000GH-C	Geothermal Heat Pump Experimenatl Equipment (Cooling Mode)
KTE-5000LT	Binary Refrigeration Experimental Equipment	KTE-HB520	Hybrid Power Conversion Experimental Equipment
KTE-6000BR	Brine Refrigeration Experimental Equipment	KTE-7000SG	Solar Power Generation Experimental Equipment
KTE-9000AU	Car Air-Conditioner Experimental Equipment	KTE-7000WG	Wind Power Generation Experimental Equipment
KTE-1000AHU	Air-Conditioning Unit Automatic Control Equipment	KTE-7000SH	Solar-hydrogen Fuel Cell Experimental Equipment
KTE-2000AHU	Air Handing Unit Lab-view Programing Equipment		

② Main Menu Composition

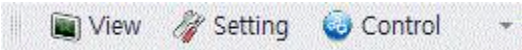

1) View

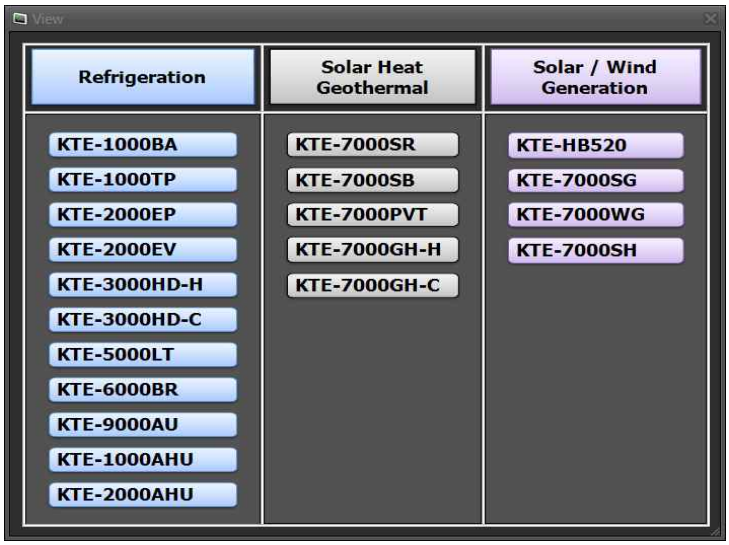

(Refrigeration 11 species, Solar-Geothermal 5 species, Solar-Wind energy 4 species)

2) Setting

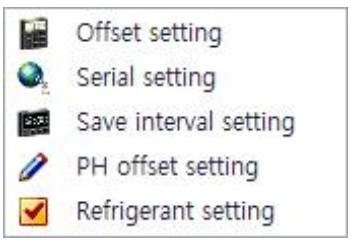

3) Control

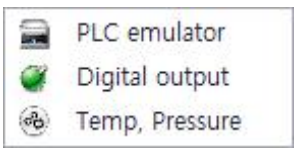

(2) Setting

Menu	Explain
Offset Setting	Setting initial pressure, temperature
Serial Setting	Communicating port setting
Save Interval Setting	Setting data acquisition time interval
PH Offset Setting	Setting range of axis at p-h chart
Refrigerant Setting	Select refrigerants

※ Please refer to page 69 for more detail information.

(3) Control

Menu	Explain
PLC emulator	Using PLC control
Digital output	Control a Hardware
Temp, pressure	Control a temperature, pressure

※ Please refer to page 76 for more detail information.

3-3 Application of data acquisition equipment(Model : KTE-DA100)

① Selection of Model

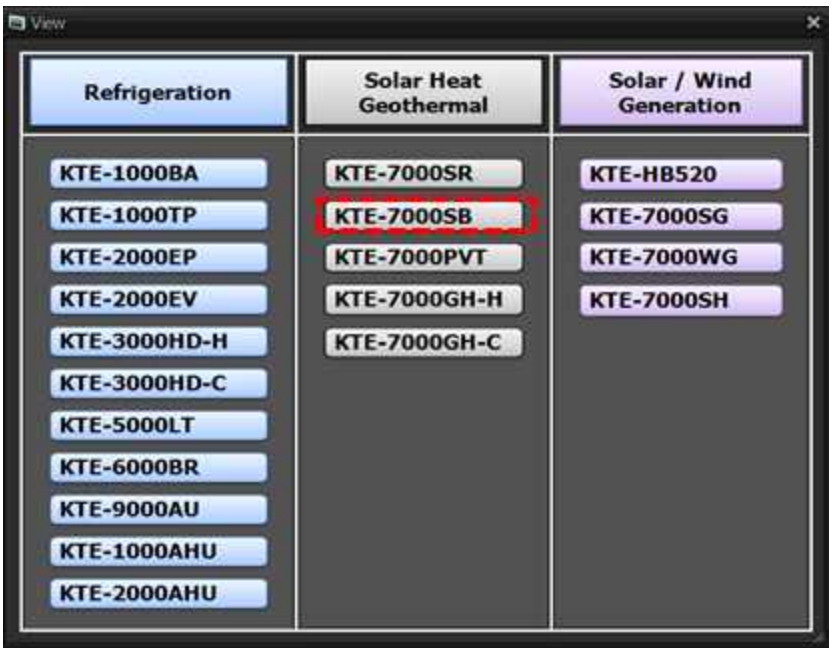

(1) When program started, 'View'screen is activated.

(2) Select a model what you want. (Click the KTE-7000SB)

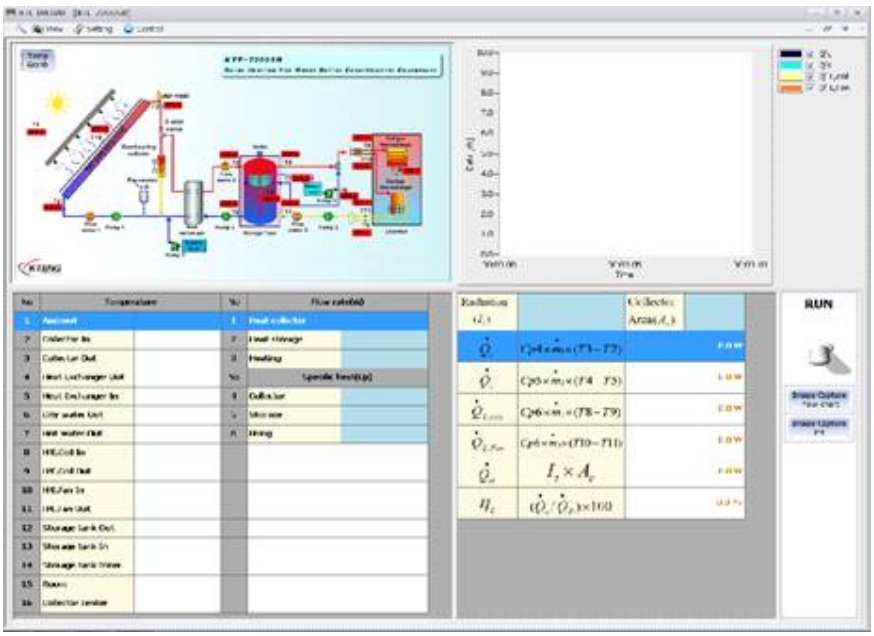

(3) Main user interface of KTE-7000SB(Solar Heating Hot Water Boiler Expermental Equipment) is activated.

ⅰ) Composition of main user interface

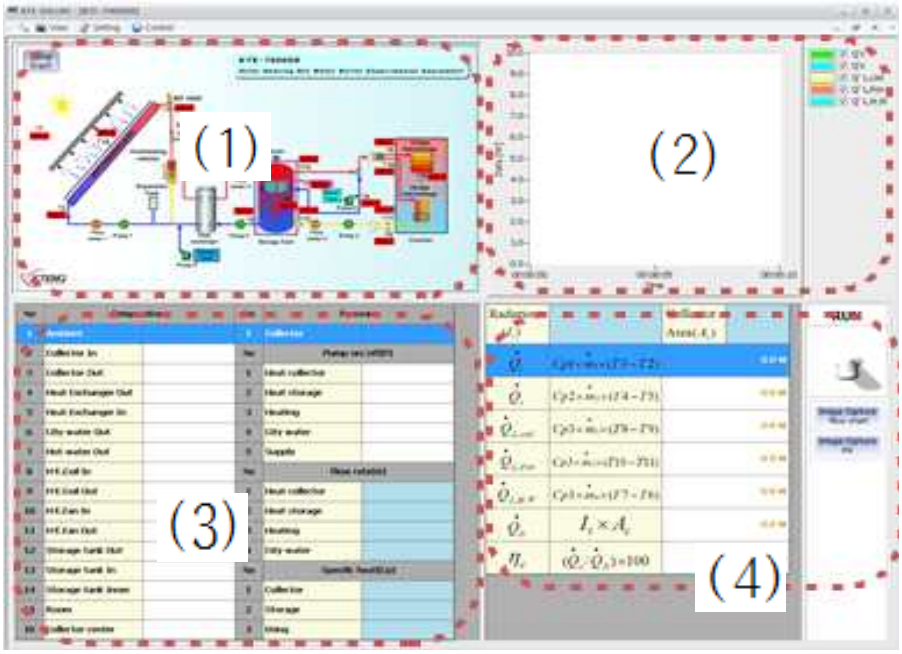

(1) Schematic diagram of system show temp, press. in realtime

(2) Temperature

(3) Data table of temp, press, and enthalphy

(4) Calculation value of COP, cooling capacity, heat capacity in HX.

ⅱ) Operating and saving data

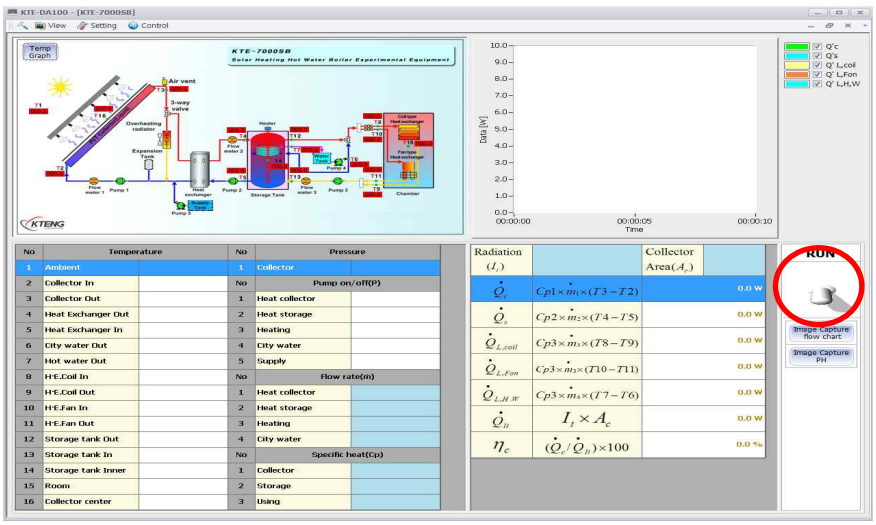

(1) Click a toggle switch to run program to save data.

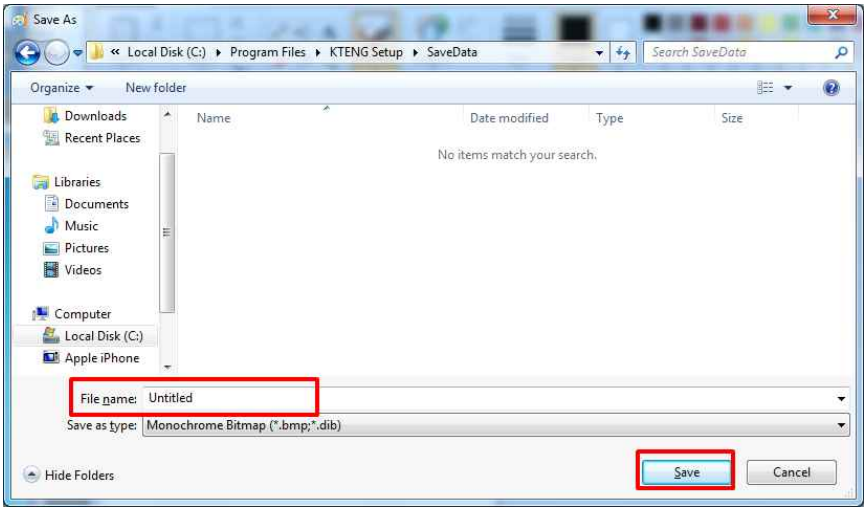

(2) Write a title and save a file by excel.

※ The reason of writing title first is that can save data even though unavoidable situation happened.

iii) Find a graph

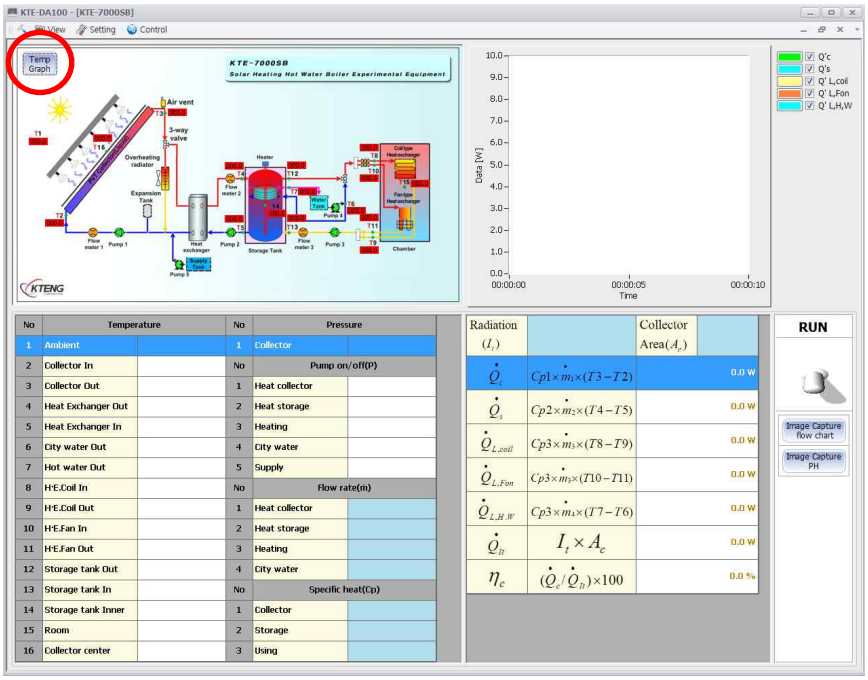

(1) If you want to see a temp., and press, graphically, please click a icon in red box below.

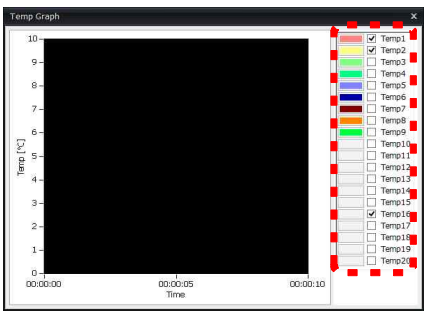

Temperature Realtime Graph

(2) You can always see the graph for location and figure through checking temperature, pressure

iv) Function for capture

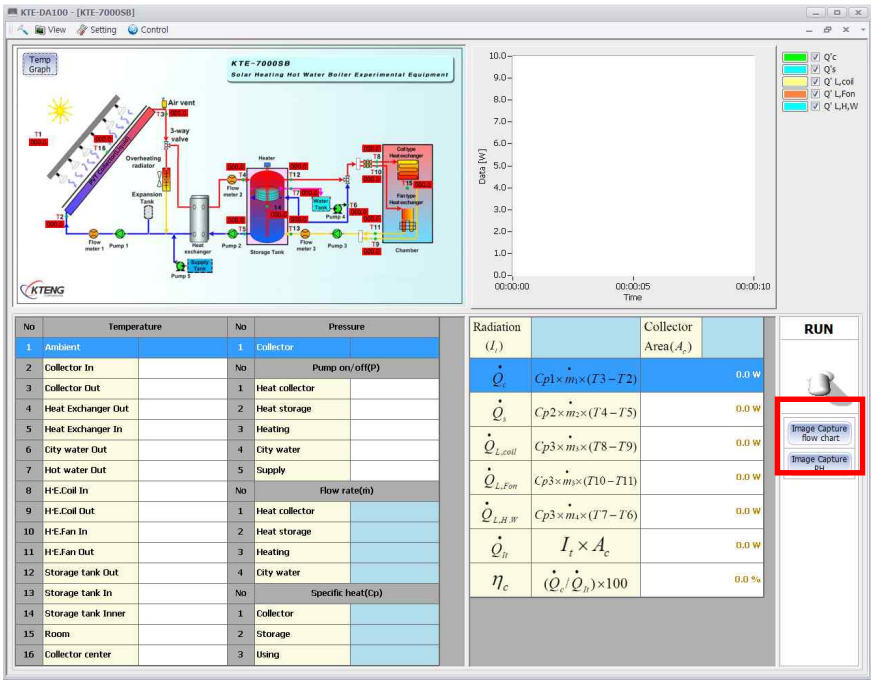

(1)

The bottom of the right side, click Image Capture flow chart and Image Capture PH then it is saved to JPG files

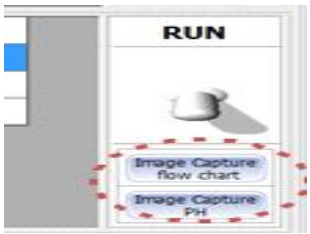

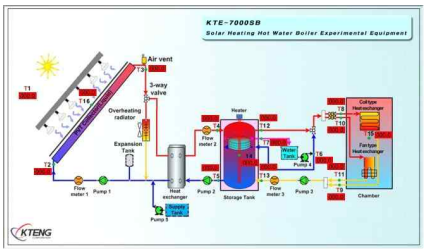

Diagram capture(Flow Chart)

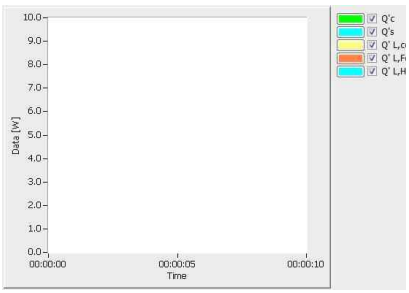

Heat graph capture

(2) Monitor when choosing

- Diagram(Flow Chart) capture
- Heat graph capture

Ⅴ) Setting

a) Serial setting

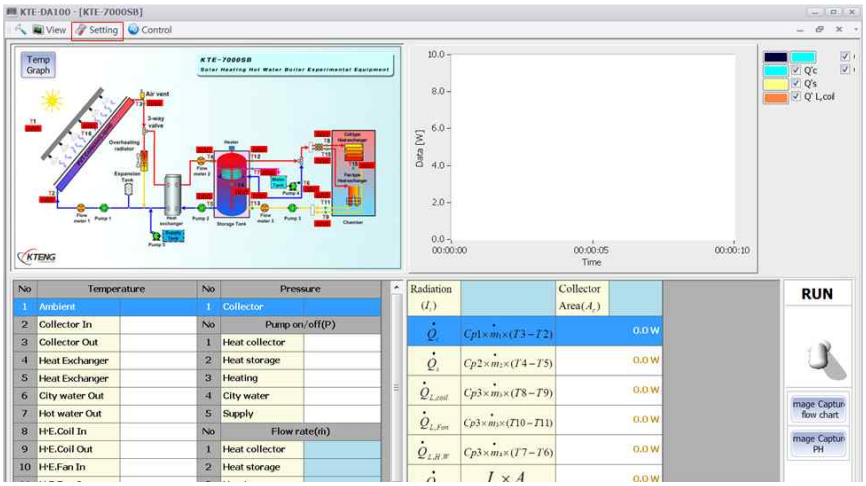

(1) Click Setting

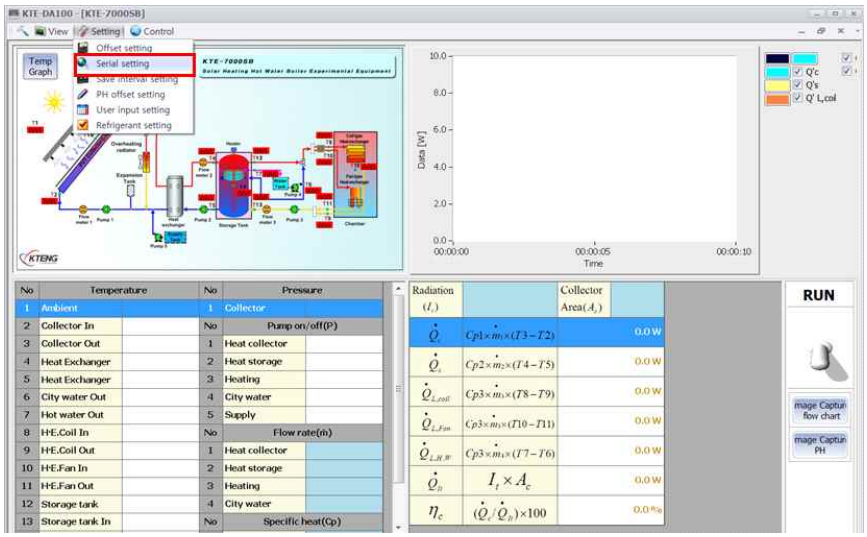

(2) Click Serial setting

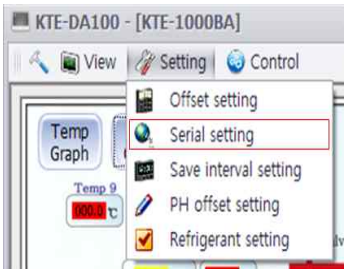

(3)
COM No is changed depend on port location. choose COM No and Click OK

※Chcking port No is on Page_1-1 use to serial installation

b) Offset setting

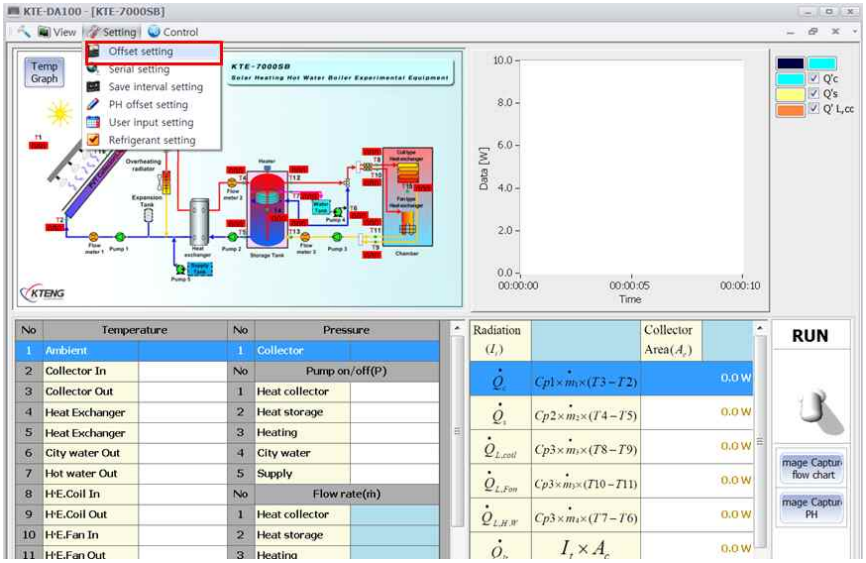

(1) Click Offsetting

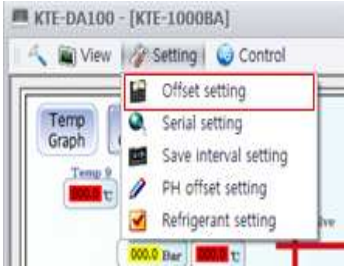

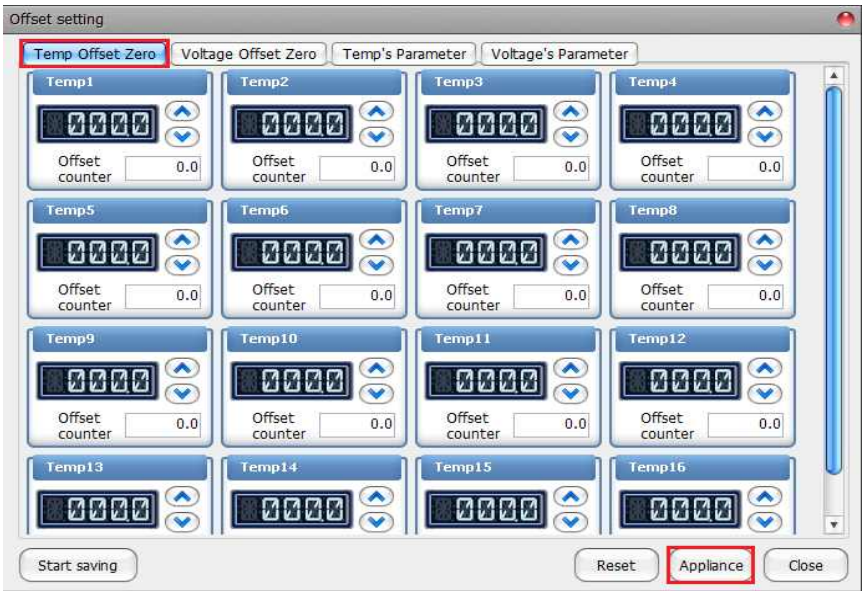

*Refer : Temp No has twenty section which is separated as a sensor

(2) Temp Offset Zero is that can control temperature

: You can control using direction key

: It is indication for temperature figure

Click the application then click the Close for applying the figure

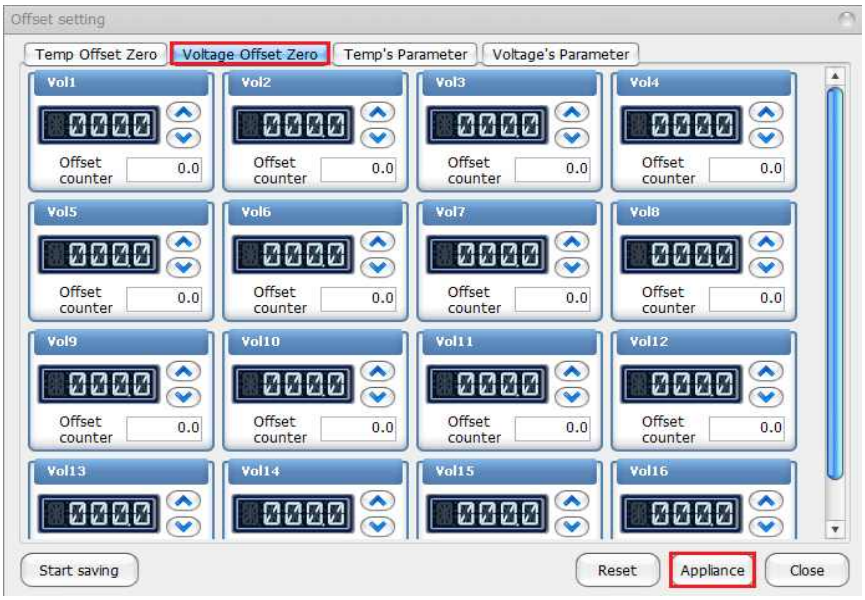

(4) Voltage Offset Zero is a part of can control voltage


: You can control using direction key

: It is indication for voltage figure

Click the application then click the Close for applying the figure

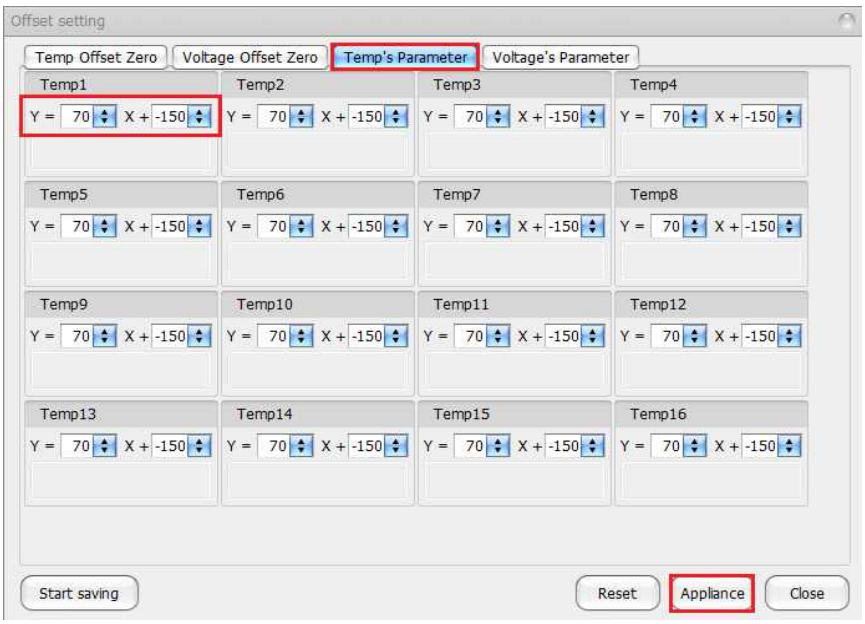

(5)Temp's Parameter must enter a value of Y = 70X-150 on all of the items is a place to enter a formula that converts the output signal of the thermometer with temperature. click the "Application" and click "Close" for Application

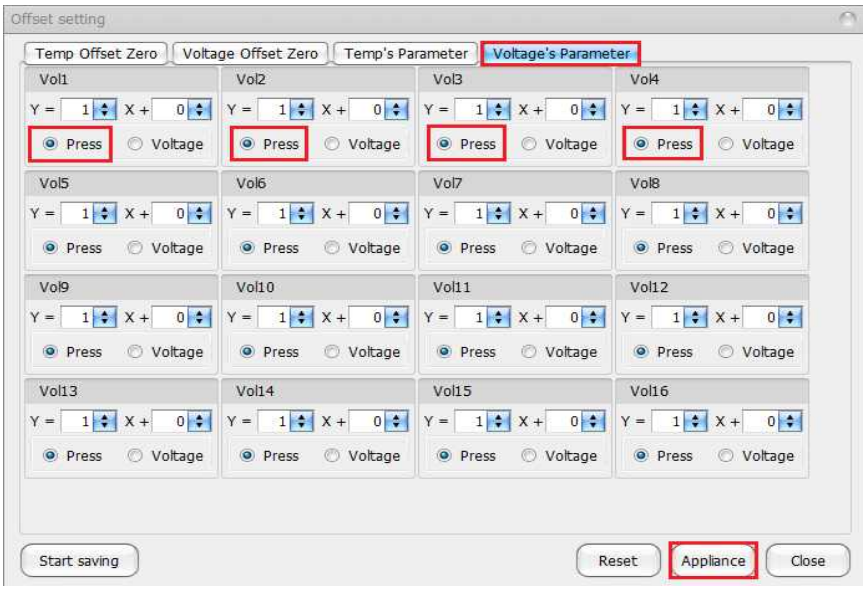

(6) Voltage`s Parameter has a function which can input the figure for changing input figure, You can set as choosing Pressure, Voltage. Click“Application" and click "Close" for Application.

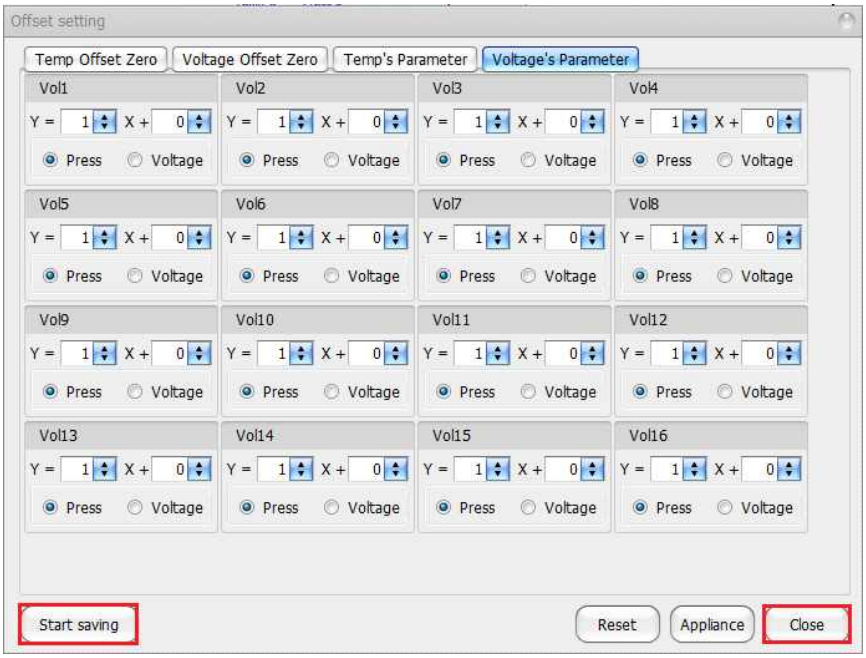

(8) Start saving set figure and Click "Close" on the left screen

c) Save interval setting

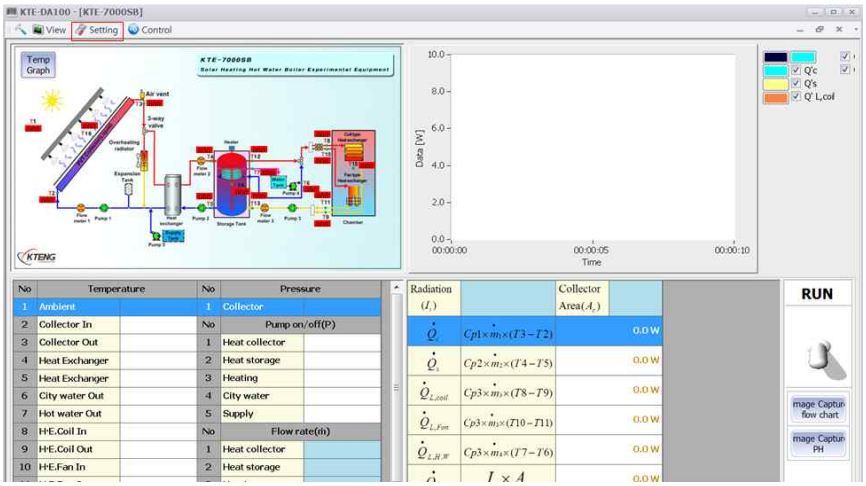

(1)Click Setting

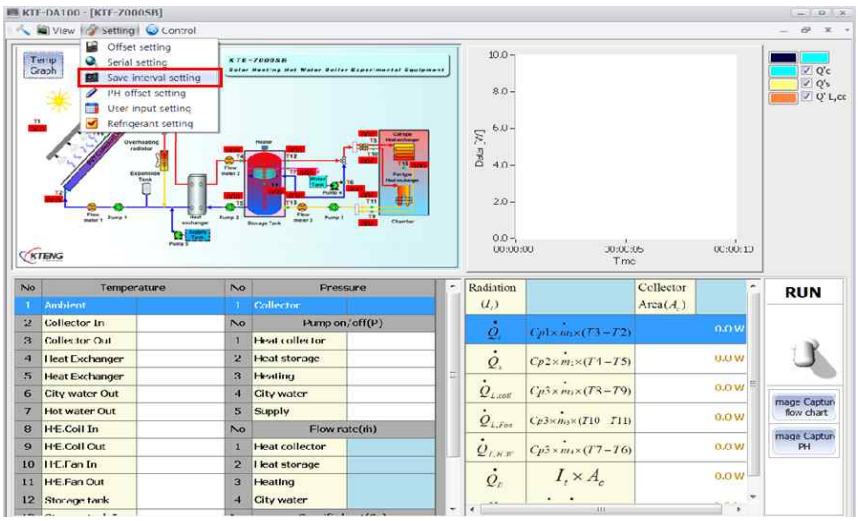

(2) Click Save interval setting

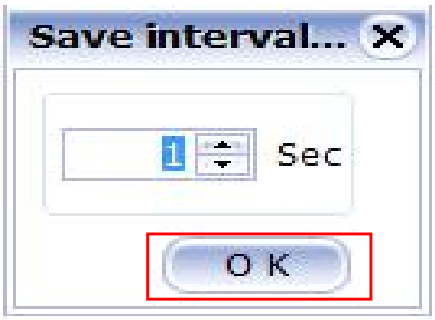

Save interval setting

A function for setting a data storage time interval The time interval as an Excel file Can be stored in line.(However, the number of seconds (Sec) because When set to one minute is Set to 60Sec)

d) User input setting

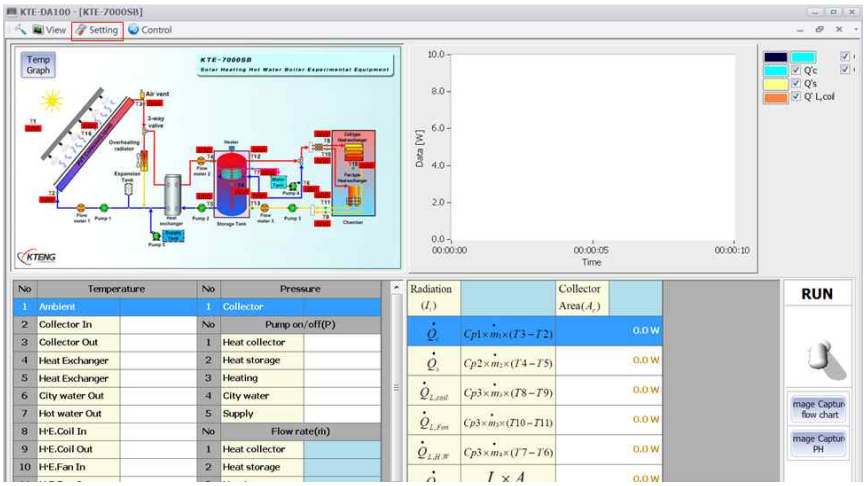

(1)Click Setting

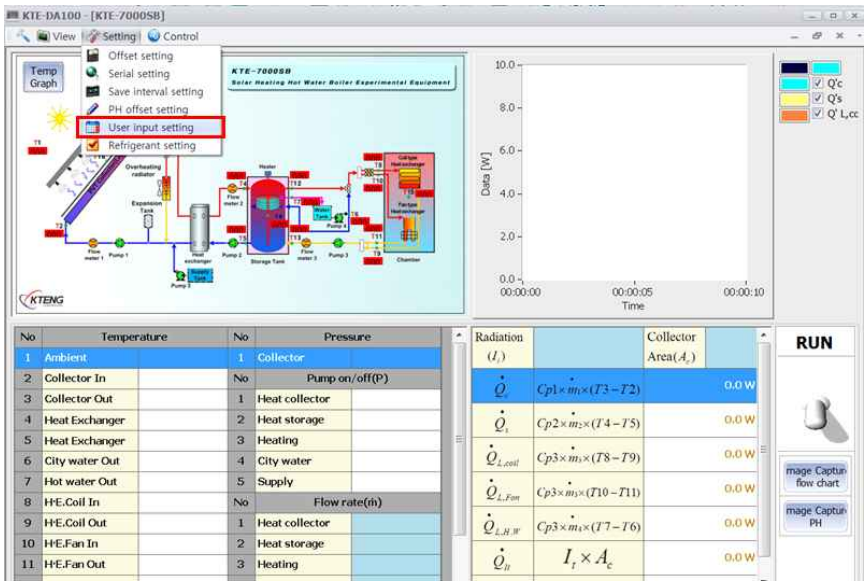

(2) Click User input setting

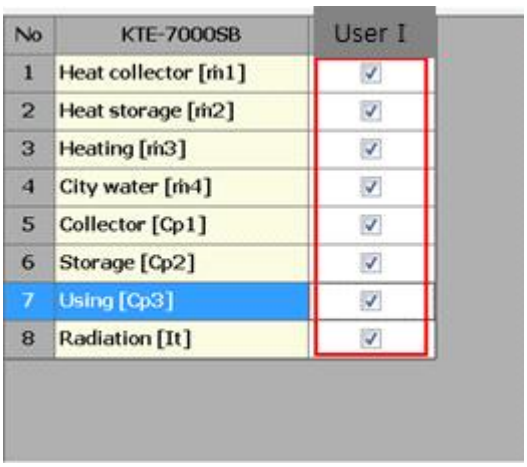

(3) Click to check Flow meter and Heat capacity and Area

e) User Input setting

(1) User Input Setting

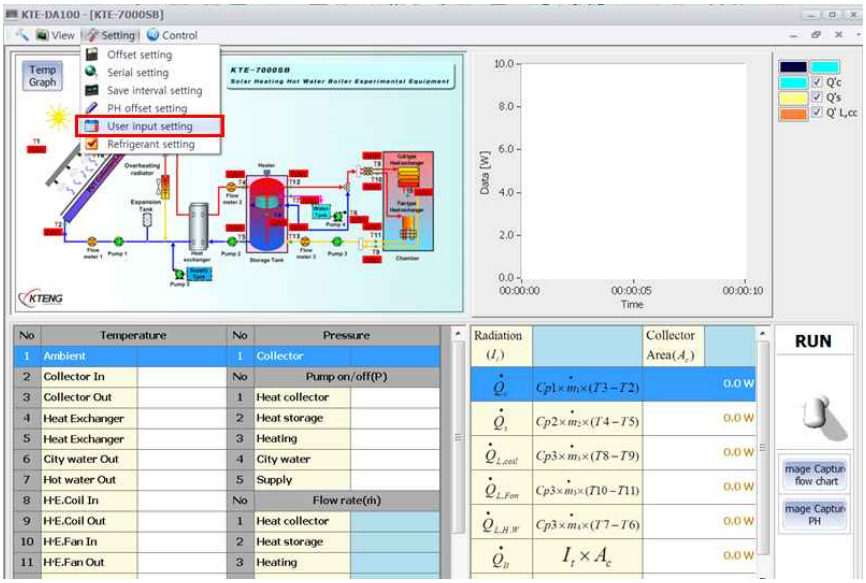

click

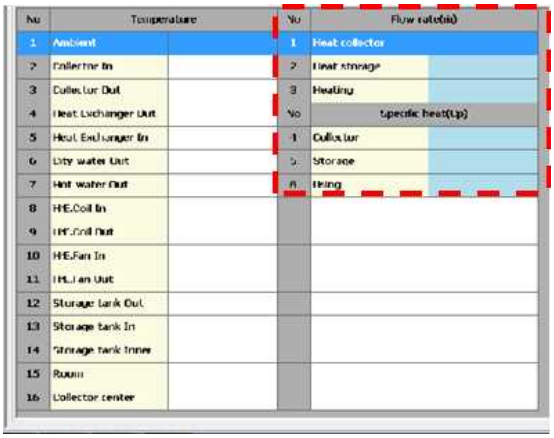

(2) Parameter input window in data table.

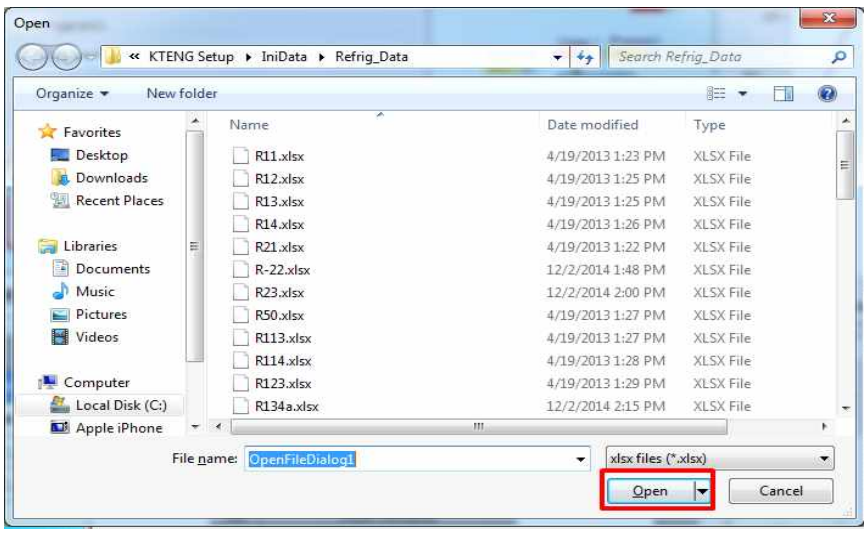

(3) Then refrigerant lists come up and choose refrigerant that is matched with system. And click the 'open' button then refrigeration properties apply to program.

iv) Control

a) Digital output

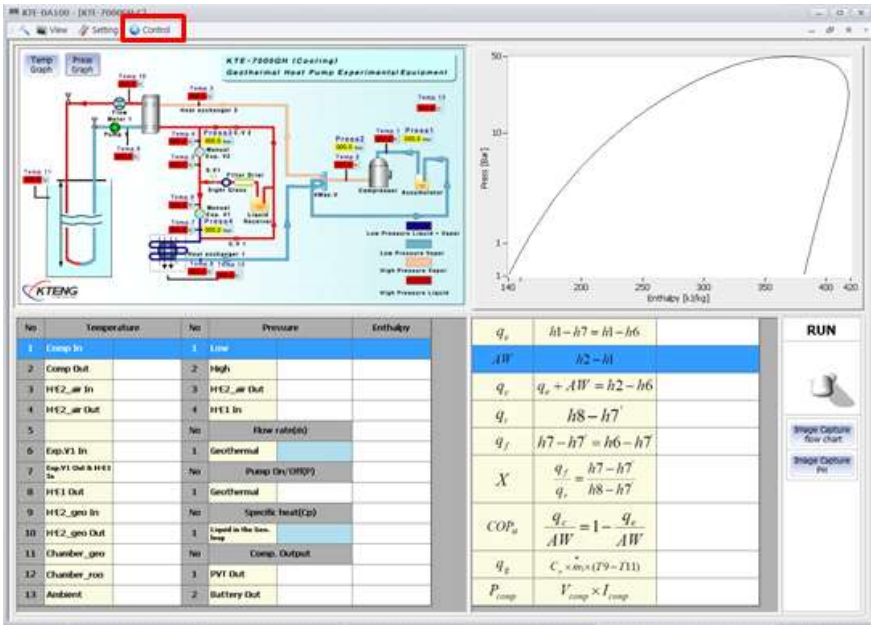

(1) Click " Control " in Tools

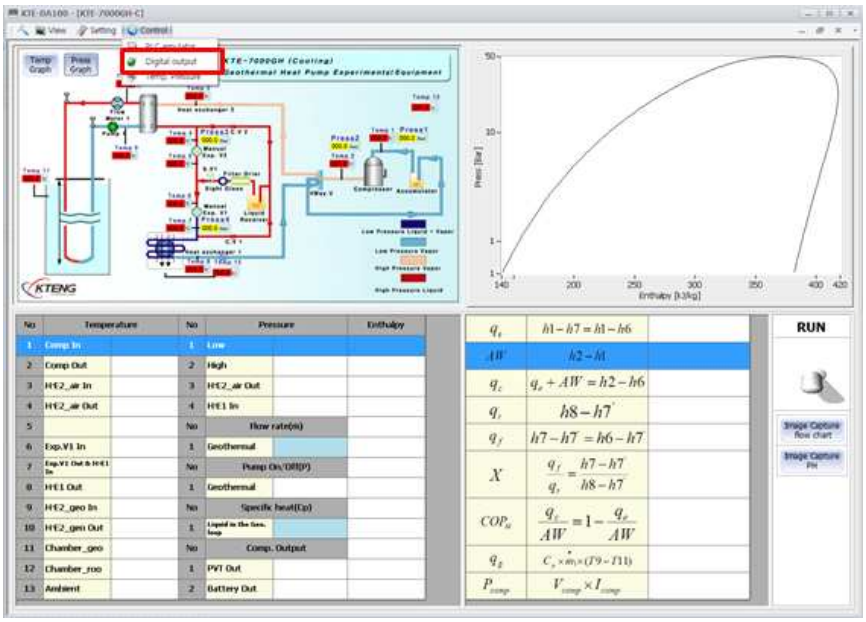

(2)Click"Digital output"

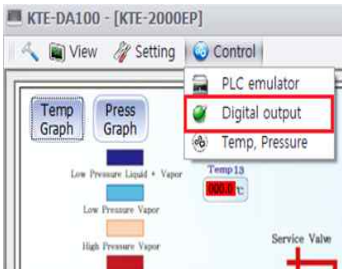

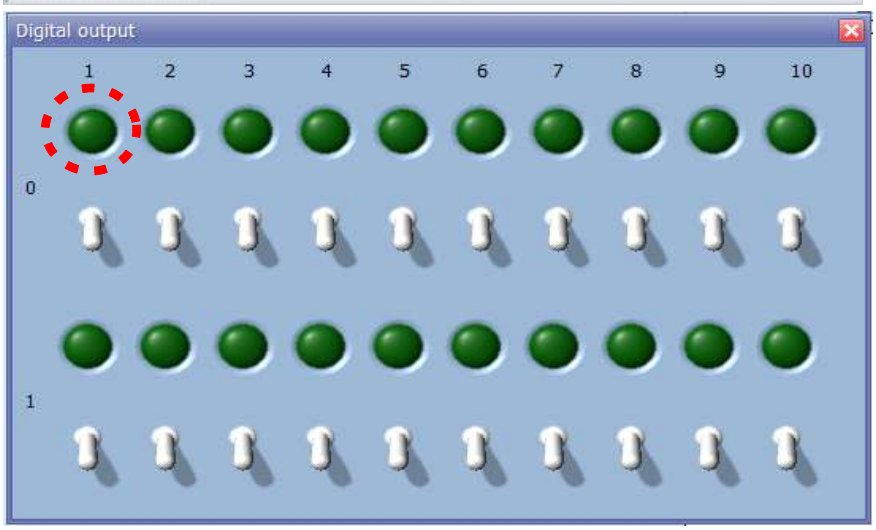

(3)Digital output is the second comp by number And to the switch ON / OFF When you work with equipment to operating the stand relay and the operation or without through the lamp Function to determine

4. Operating Electric Circuit Solar Heat Energy Boiler

Assignment Title	1. Understanding the Operation Principles of Solar Heat Hot Water Boiler	Time Required 8 Hours
Objective	- To understand the components of the solar heat hot water boiler and the principles of solar heat collecting thereof. - To master usages of Artificial Solar test equipment.	

Equipment	Tools and Materials	Specification	Quantity
- Solar Heat Hot Water Boiler Test Equipment (KTE-7000SB) - Artificial Solar Test Equipment (KTE-PL1K)			

Components of Solar Heat System

· Diagrams of Equipment

- KTE-7000SB (Solar Heat Hot Water Boiler Test Equipment)
- KTE-PL1K (Artificial Solar Test Equipment)

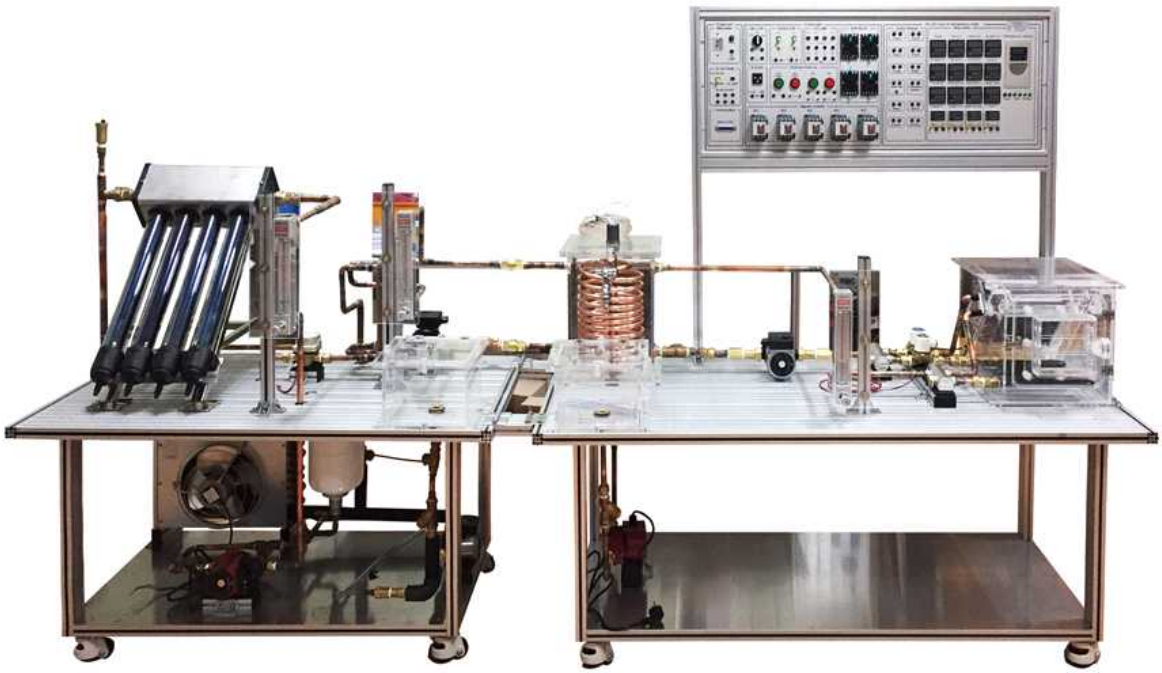

· Background Information

1. Principles of Solar Heat System

① Solar Energy Technology

- Average amount of annual insolation from the Sun to the atmosphere is approximately 1367 W/m^2
- The solar energy that reaches surface of the Earth has lower density (1021 W/m^2) and only exits in day times
- The wavelength range of solar energy used as heat energy is mainly in the visual range (0.4μm ~ 0.75μm).
- Solar heat system is a technology that absorbs, stores and converts the radiant energy from the sun rays for heating, cooling or supplying hot water to buildings.
- The core technologies used in solar ehat system is solar energy collecting technology, thermal storage technology and system designing technology.

② Components of the solar heat system

- Energy Collector: Consists of devices that collects energy from the Sun and converts to heat energy
- thermal storage Tank: Consists of tanks in which collected heat is stored to use it when necessary
- Processing Part: It effectively supplies the solar heat stored in the tank and when there is a lack of usage, it supplies heat through auxiliary heat sources (e.g. boiler)
- Controller: Consists of panels for effectively controlling the collection, storage and supply of solar heat

2. Advantages and Disadvantages of Solar Energy

Advantages	Disadvantages
- Pollutant-free and cost-free natural energy with infinite quantity - Dispersal energy source that has comparatively lower regional deviation than the fossil energy does - Reusable energy that can reduce carbon gas emission to prevent global warming	- High-quality energy with low energy density - Sporadic production of energy - Stable supply to meet the continuous demand is difficult

3. Types of Solar Heat System

① The solar heat system can be divided into **Active Solar System** and **Passible Solar System**, depending on the existence of the driving gear (pump or fan) on the heat media

- Passive solar system: Processes the heat energy in a form of natural convection using the density of heat in the solar energy without a driving gear like pump or fan that transfers the heat energy
- Active solar system: Processes the heat energy from the Sun by transferring it using a device like pump or fan to the storage tank or processing part

② Advantages and Disadvantages of active and passive solar system

Division / System	Advantages	Disadvantages
Active	- Easy to control temperature - Stable system	- Low economic feasibility - Hard to design, operate and manage - High risks of damages
Passive	- High economic feasibility (lower initial cost) - Easy to design, operate and manage - Comforter operating conditions (due to the radiant heat)	- Hard to control temperature

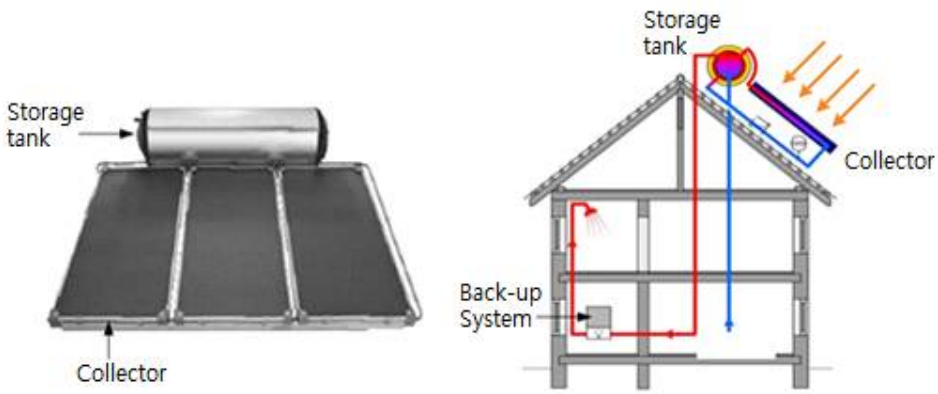

(A) Passive Solar System

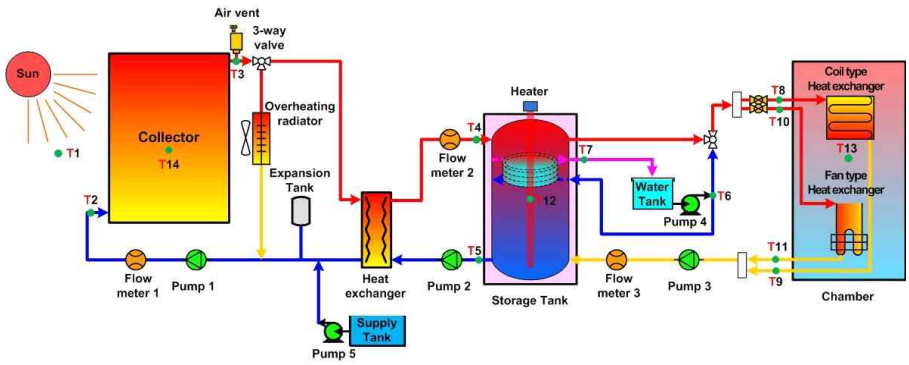

(B) Active Solar System

③ Operation Principles of Active Solar System

- Heat collecting process: ① Receive heat energy from the Sun, ② Temperature rise in heat collector, ③ Start operating Pump1 and Pump2, ④ Heat collecting medium enters T2 (input of heat collector), passes through T14 to absorb solar energy, which is emitted through 43 (output of heat collector) then enters the heat exchanger. Here, the heat energy is transferred through heat exchanges with the heat storing medium.
- Heat storing process: ① Pump1, heat collecting convection pump, links with Pump2 to run it ② The thermal medium stored in thermal storage tank passes through T5 (output of heat tank), passes through the heat exchanger and enters T4 (input of heat tank) ③ Here, the heat energy is absorbed from the heat collecting medium and transferred to the top part of the heat tank
- Heat processing: ① If temperature of T13, internal temperature of chamber, is lower than the setting value, ② run Pump3. ③ The thermal medium stored in the heat tank passes through a distributor and enters T8 (T10). Then it heats up the chamber through the heat exchanger and returns to the heat tank through T9 (T11)

· **Requirements**

1. Prepare Solar Heat Hot Water Boiler test equipment (KTE-7000SB) and supply circulating water to run through the pipes.
2. Prepare Artificial Solar test equipment (KTE-7000AS) and supply power.
   ① 5 minutes after started supplying the power, turn on the lamps.
   ② To turn off the Artificial Solar equipment, turn off the lamps in the same order as you did to turn the equipment on.
   ③ Each lamp on the Artificial Solar test equipment has an output of 1kW and emits strong UV waves, so make sure not to stare at the lamps or expose skin to the light for a long time
3. Describe the structure of the solar heat system and the principles of collecting solar energy thereof

Assignment Title	1. 2. Understanding the Components of Solar Heat Hot Water Boiler	Time Required 8 Hours
Objective	- To understand the types of solar heat collector and the operation principle thereof - To understand the principles of the main components of the Solar Heat Hot Water Boiler system	

Equipment	Tools and Materials	Specification	Quantity
- Solar Heat Hot Water Boiler test equipment (KTE-7000SB) - Artificial Solar test equipment (KTE-PL1K)			

Components of Solar Heat System

· Diagrams of Equipment

- KTE-7000SB(Solar Heat Hot Water Boiler test equipment)
- KTE-PL1K(Artificial Solar test equipment)

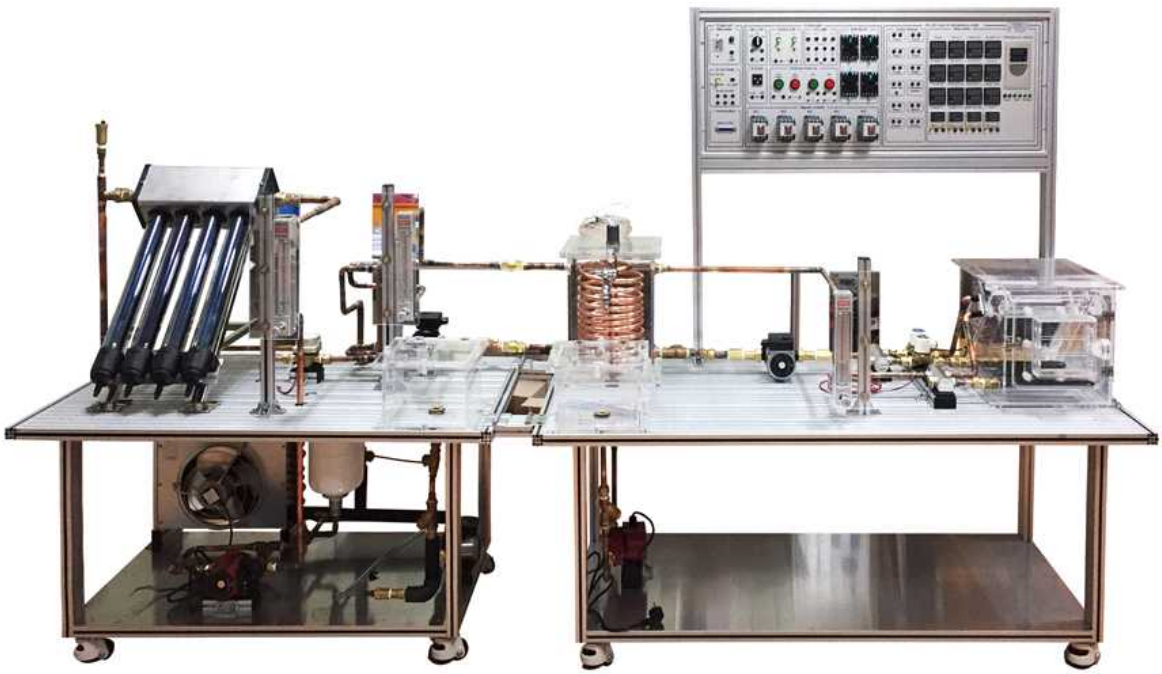

· Background Information

1. Solar Heat Collector

① What is a solar heat collector?

- A mechanical equipment that absorbs the solar energy and converts it to heat energy for use to use

② Types of solar heat collector

Flat Plate Heat Collector (Low Temp.)	Vacuum Pipe Heat Collector (Low/Medium Temp.)	PTC Heat Collector (Medium Temp.)
	 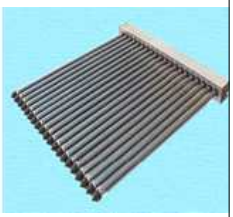	
- Room heating effect / hot water supply (for small scales) - At commercialization stage	- Water heater/boiler for houses - At commercialization stage	- Heating/cooling buildings, industrial heat processing, waste water processing - Technology development completed. At distribution stage

CPC Heat Collector (Medium Temp.)	Dish Heat Collector (High Temp.)	Power Tower Heat Collector (High Temp.)
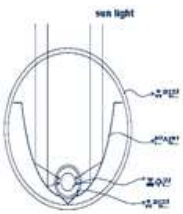 		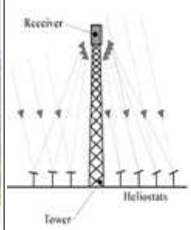 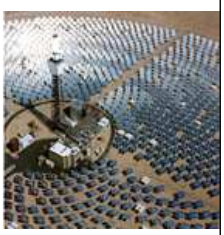
- Heating buidligns, large-scaled water boiler - Technology development completed. At distribution stage	- Large-scaled heat development, photochemistry works - In technology development stage. Partially, commercialized	- Large-scaled heat development, photochemistry works - Technology development completed. Promoting commercialization

③ Components of Flat Plate Solar Heat Collector

- Consists of glazing materials, absorbing plates, thermal medium pipes, main pipes, frame, insulator and pipe connectors

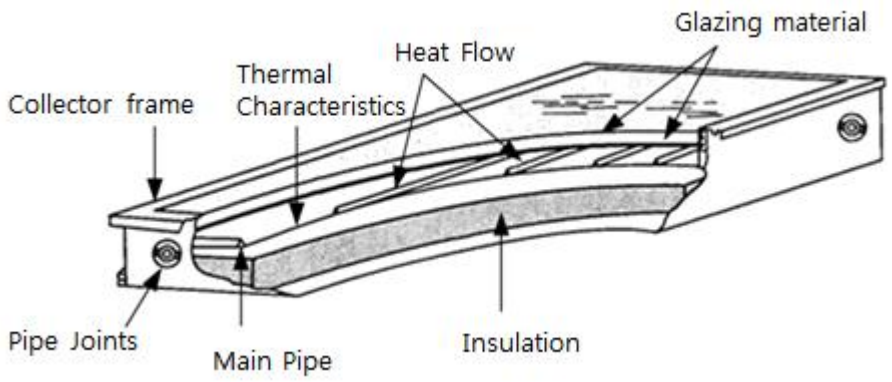
Glazing material
Heat Flow
Thermal
Characteristics
Collector frame
Pipe Joints
Main Pipe
Insulation

④ Principles of solar heat collector

- Solar heat enters through a glass cover or glazing material of the heat collector, absorbed by a metal plate that is colored in black and is converted to heat energy. The solar heat stored in this absorbing plate is transferred to a thermal storage tank by cooling fluids (water or air) to be stored.

⑤ Essential elements of solar heat collector

- Heat efficiency of the collector must be high enough in the desired temperature range
- Must have high durability against corrosion, high temperature occurred in malfunctioning, heat expansion and heat shrinkage
- Cost of the heat collector and installation cost thereof must be low

2. Storage Tank

Storage Tank

① Importance of thermal storage

- There are spatial or time gaps between the source, which produces heat, and the device, which uses the heat. In order to overcome the spatial gaps, a heat exchanger or pipes are required to transfer the heat and for the time gaps, thermal storage is required. Moreover, the thermal storage system fixes the instantly broken balance of loads between the heat source and device, enhancing the performance of the overal system as well as converting low-graded energy to high-graded energy. Thus, the function of thermal storage system can be defined as reducing the inconsistency in time, quality and quantity aspects of the heat source and device.

② Method of Storing Heat

- Solar heat can be stored by either sensible thermal storage or latent thermal storage, but the sensible thermal storage with water as a medium is the mostly used method.

③ Storage categories by the type of energy

- Thermal Storage
- Electrical Storage: Capacitor, Superconducting, etc.
- Mechanical Storage: pumped power generation, compressional energy, flywheel, etc.

- Chemical Storage: Fuel cell, etc.

④ Case where thermal storage is necessary

- Since there is no thermal load occurred during heat collection in a solar heat system, thermal storage is required. Diagram (A) shows a case in which there is no or less thermal load than collected heat, and thus part of the collected heat need to be stored. Diagram (B) shows a case in which the thermal load is greater than the collected heat so that all collected heat can be consumped and no heat is required to be stored.

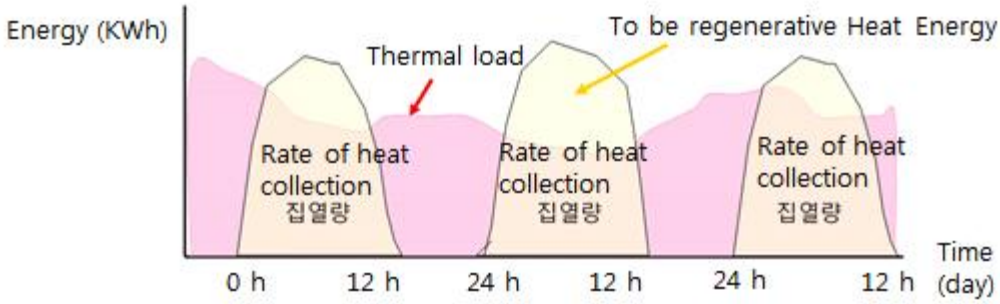

(A) In case thermal storage is necessary

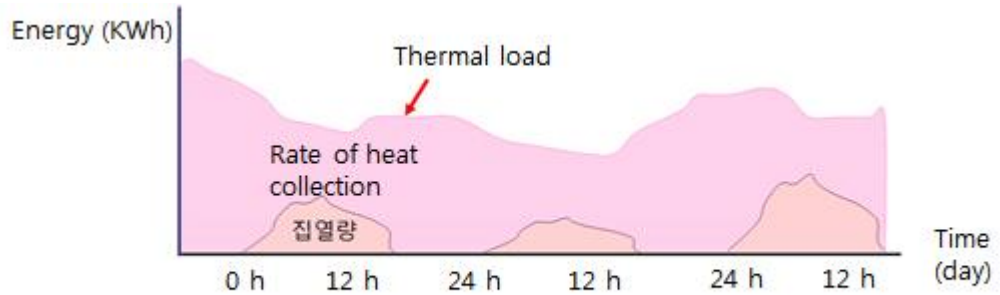

(B) In case thermal storage is unnecessary

⑤ Requirements for thermal storage system

- Volumetric heat capacity must be large.
- Needs to be cheap, harmless on human body and has long durability.
- Rate of thermal storage/discharge must be high with large coefficient of thermal diffusivity.
- Must be easy to work in series with heat collector or emittor systems.

⑥ Types of thermal storage system

- Various shapes (cubic, spherical, cylindrical, etc.) of thermal storage tank are available
- Below are the various types of solar heat storage tank for households

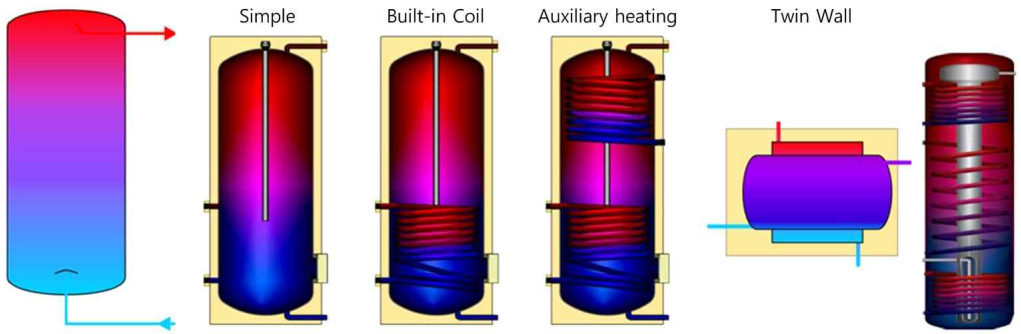

⑦ Thermal storage tank temperature stratification

- Temperature stratification in a thermal storage tank means a process of maintaining a stable condition by layering high-temperature water on top of the tank and low-temperature water at the bottom according to the difference in density caused by the temperature change of the thermal storing medium.
- In such condition, medium with low density (or high temperature) is positioned at the top of the tank and medium with high density (or low temperature) is positioned at the bottom of the tank. Thus, no heat convection occurs in the tank, whereas heat conduction at thermocline still occurs.
- In general, thermal storage tank with temperature stratification is known to have about 10% higher thermal storing efficiency than the completely mixed tank. Such effect is described in below diagram.

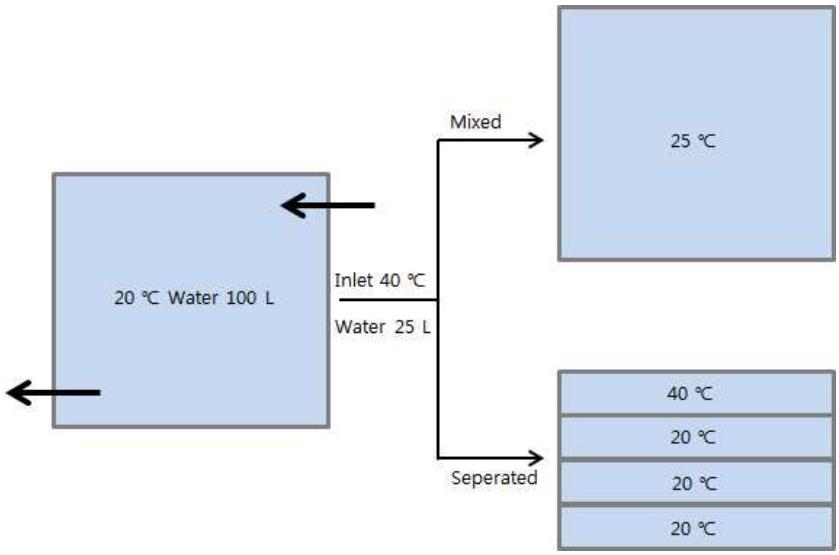

3. Control System

① Controlling the temperature difference

- The difference between temperatures of thermal media at the input and output of the heat collector is detected and the circulating pump at heat collector or storage tank is driven accordingly

② Principles of controlling the temperature difference

○ When the circulating pump is stopped

⇒ (Output temp. of collector - Input temp. of collector) > ΔT_{ON} : Run circulating pump

⇒ (Output temp. of collector - Input temp. of collector) < ΔT_{ON} : Keep circulating pump stopped

○ When the circulating pump is operating

⇒ (Output temp. of collector - Input temp. of collector) > ΔT_{OFF} : Keep circulating pump operating

⇒ (Output temp. of collector - Input temp. of collector) < ΔT_{OFF} : Stop circulating pump

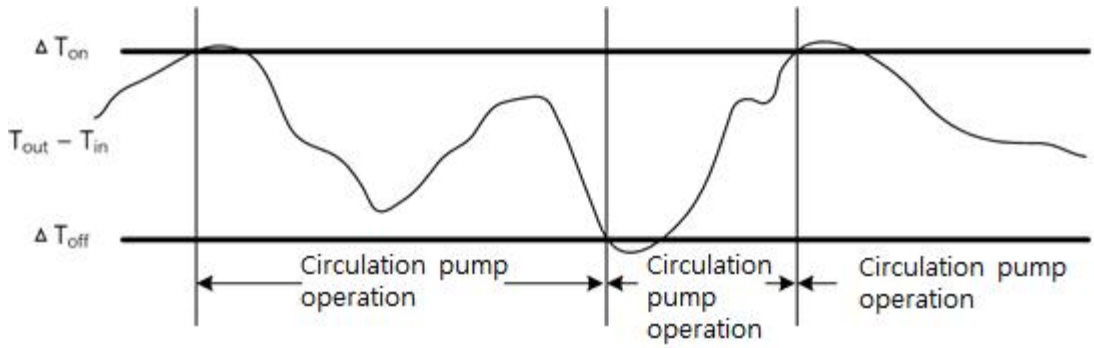

③ Freeze Protection

- The solar heat control system includes prevention of freezing of heat collector or the pipes thereof. Generally, such function is not required in antifreeze system, but in a system that uses water as a thermal medium, the system discharges the thermal medium or circulates water inside tank when the temperature of heat collector drops to 2~3℃.

④ Overheating Protection

- In a solar heat system, there may occur problems with a lack of thermal load compared to the collected amount or with a too high temperature of stored heat. In such cases, measures to protect the collector, tank and system must be performed as a part of the system control.

· **Requirements**

1. Prepare Solar Heat Hot Water Boiler test equipment (KTE-7000SB) and supply circulating water to run through the pipes.
2. Prepare Artificial Solar test equipment (KTE-7000AS) and supply power.
   ① 5 minutes after started supplying the power, turn on the lamps.
   ② To turn off the Artificial Solar equipment, turn off the lamps in the same order as you did to turn the equipment on.
   ③ Each lamp on the Artificial Solar test equipment has an output of 1kW and emits strong UV waves, so make sure not to stare at the lamps or expose skin to the light for a long time
3. Describe the structure of the solar heat system and the principles of collecting solar energy thereof.

Evaluation Standards	Criteria		Marks	Scores	Notes			
	Works (70)	Describing the types and characteristics of solar heat collectors	20					
		Describing the functions and role of thermal storage tank	20					
		Describing the method of connecting the solar heat collector with the thermal storage tank	20					
		Operating the artificial lighting	10					
	Attitudes (10)	Working attitude and safety issues	5					
		Usage of materials/tools and clean-up work afterwards	5					
	Time (20)	( ) points off for every ( ) minutes over the required time limit			Works	Attitudes	Time	Total Score

Assignment Title	2. 3. Construction of Switch Circuit for Controlling the Operation of Solar Heat System (Push Button, Selector Switch)	Time Required 8 Hours
Objective	① To understand the principles of push button switch and to construct a driving circuit ② To understand the principles of toggle button switch and to construct a driving circuit ③ To understand the principles of push selector switch and to construct a driving circuit	

Equipment	Tools and Materials	Specification	Quantity
- Solar Heat Hot Water Boiler test equipment (KTE-7000SB)	· Driver · Nipper · Wiper Striper · Hook Meter	· #2× 6× 175㎜ · 150㎜ · .5~6㎟ · 300A 600V	1 1 1 1 per each group

Components of Solar Heat System

· **Controller Circuit**

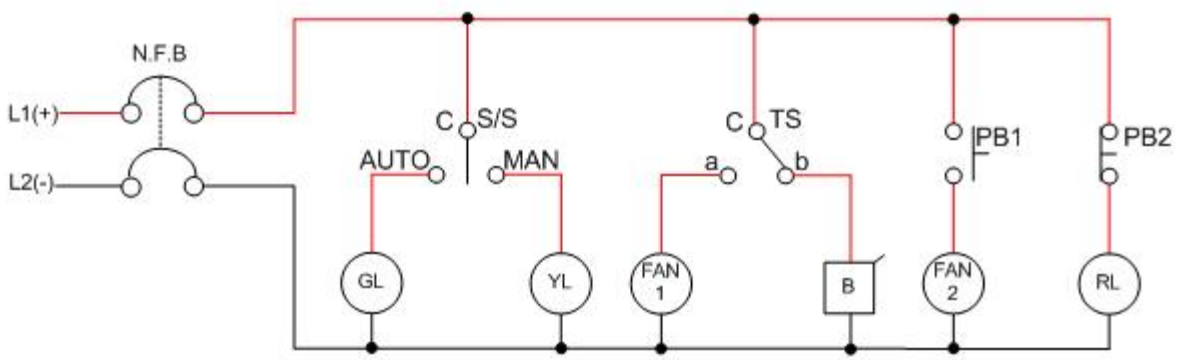

L1, L2 : Line potential

N.F.B : Overcurrent breaker

TS : Toggle switch

FAN1 : Overheating prevention fan

S/S : Selector switch

B : Buzzer

PB1 : contact A push button switch

PB2 : contact B push button switch

RL, GL, YL : Lamp

FAN2 : Heating fan

2. Push button switch

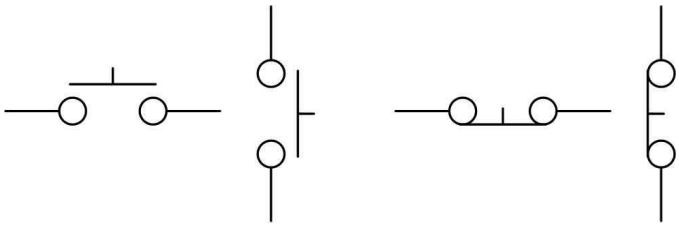

Diagram 2. Push button switch Diagram 3. contact A Diagram 4. contact B

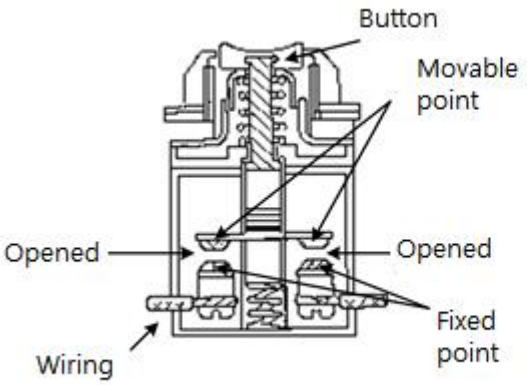

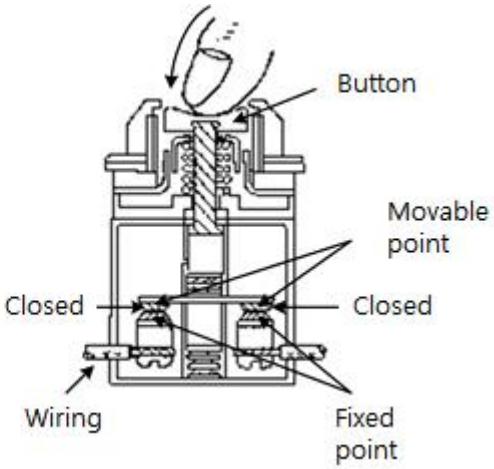

Diagram 5. Switch at original position Diagram 6. Switch opened

(1) Switches are used the most to make control orders. Above diagrams show operation of the push button switches. Switches(PB :Push Button switch) closes or opens the circuit across an contact when manually pressed down. Once you remove your hand from the switch, a spring will act to automatically return the switch to its original position.

3. Toggle Switch

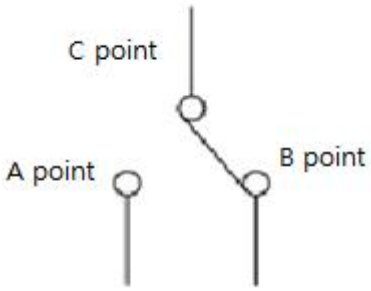

Diagram 7. Toggle Switch Diagram 8. Circuit Diagram

(1) Toggle switch is another type of switches used on a circuit. Above diagrams show the toggle switch (a.k.a. snap switch). Switches can be categorized into automatically and manually intersecting types depending on their operating method. Push button switch belongs to the former, whereas toggle switch belongs to the latter type of switches. The characteristics of their contact are noted using different symbols.

4. Selector switch

Diagram 9. Selector switch

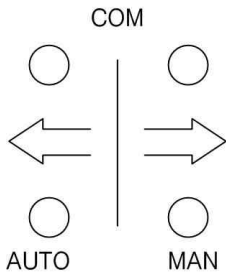

Diagram 10. Circuit Diagram

(1) Above diagrams show a selector switch (a.k.a. rotary switch). It maintains its last state of contact even after you take your hand off the switch. You may select between AUTO and MAN using the switch lever.

5. “A" and "B" contact circuit with different types of switch

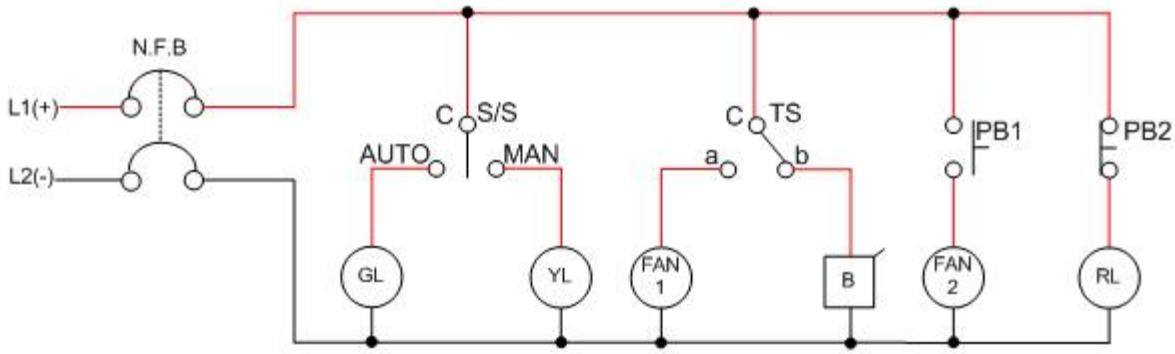

(1) GL Lamp turns on when S/S is on AUTO.
YL Lamp turns on and GL Lamp turns off when S/S is on MAN.
(2) Buzzer sounds when TS is on b.
FAN1 runs and Buzzer turns off when TS is on a.
(3) FAN2 runs when PB1 at A contact is pressed.
FAN2 stops when hand is taken off from PB1.
(4) RL turns off when PB2 at B contact is pressed.
RL turns on when hand is taken off from PB2.

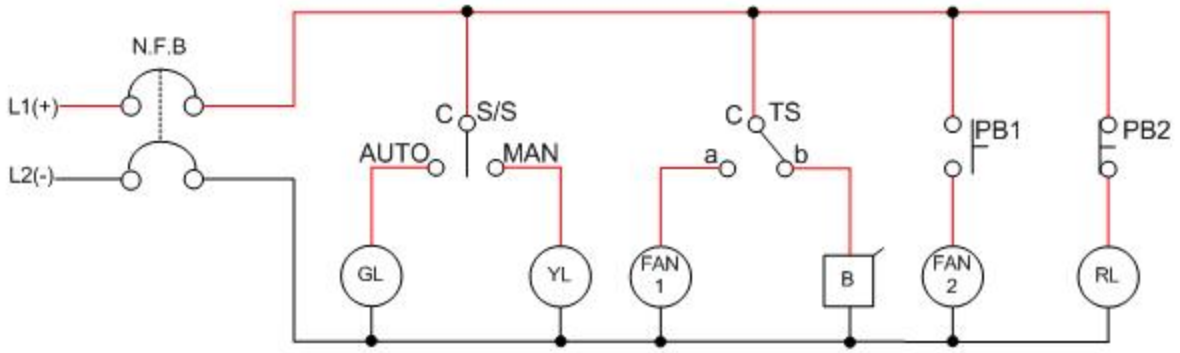

・Requirements

1. Prepare and inspect test equipment, tools and materials.
2. Use the test equipment, tools and materials to make and run a circuit with a banana jack.
3. Understand how the circuit works.
   (1) Explain the actions that occur when Toggle switch turned on(a) and off(b).
   (2) Explain the actions that occur when push switch is pressed down.
   (3) Explain the actions that occur when Selector switch is on AUTO and MAN.
4. Use the test equipment, tools and materials to construct an actual circuit and run it.

Evaluation Standards	Criteria		Marks	Scores	Notes			
	Works (70)	Operation of circuit with banana jack	20					
		Operation of the actually wired circuit	20					
		Real circuit and wiring condition	10					
		Understanding and description on the circuit	20					
	Attitudes (10)	Working attitudes and safety issues	5					
		Usage of materials/tools and clear-up works afterwards	5					
	Time (20)	( ) points off for every ( ) minutes over the required time limit			Works	Attitudes	Time	Total Score

Assignment Title	3. 4. Experiment on "C" Contact Circuit using Relay	Time Required 8 Hours
Objective	① To understand the structure of relay and operation principles thereof. ② To turn Lamp on and off using the contact of relay.	

Equipment	Tools and Materials	Specification	Quantity
- Solar Heat Hot Water Boiler test equipment (KTE-7000SB)	· Driver · Nipper · Wire Striper · Hook Meter	· #2× 6× 175㎜ · 150㎜ · .5~6㎟ · 300A 600V	1 1 1 1 per each group

Components of Solar Heat System

· **Controller Circuit**

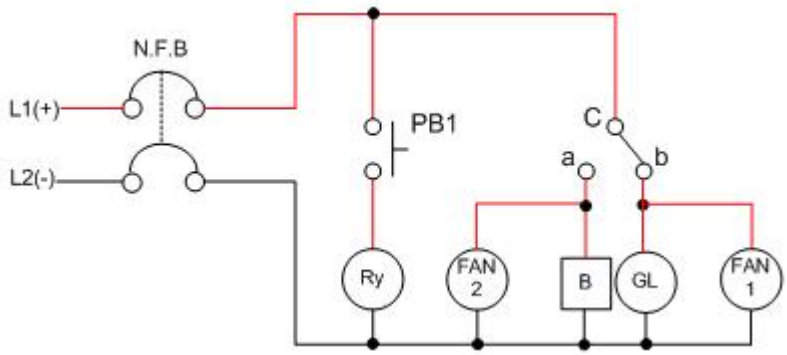

L1, L2 : Line potential

N.F.B : Overcurrent breaker

Ry : Relay

B : Buzzer

GL : Green Lamp

FAN1: Heat emitting fan motor for heating

FAN2: Heat emitting fan motor for overheating

2. Relay

Diagram 2. Relay

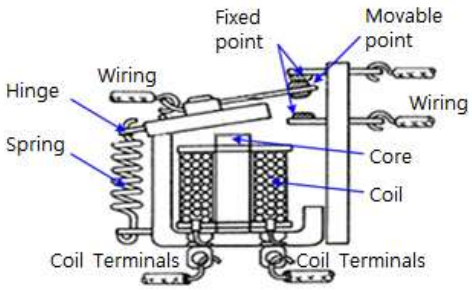

Diagram 3. Internal components of relay

(1) An electrical circuit is divided into two parts with one producing signals and another operating according to the signal, so the circuits need to be able to be opened and closed. Thus, an electrical component called relay, a type of electrical switch.

3. Relay at “C" contact on ”a" and "b" contact circuit

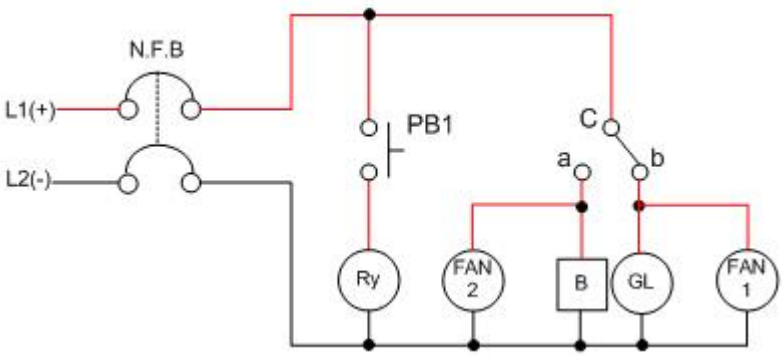

(1) When you turn N.F.B switch on GL and FAN1 turns on since RY-b contact is closed and FAN2 and Buzzer will turn off since RY-a contact is opened. (PB1 stays opened)

(2) When you press PB1 the coil on relay is energized and RY-a contact is closed so FAN2 and Buzzer turns ON, whereas FAN1 turns OFF.

(3) Arbeit contact means 『a working contact』 and is marked as “a”.

(4) Break contact means 『an opening contact』 and is marked as “b”.

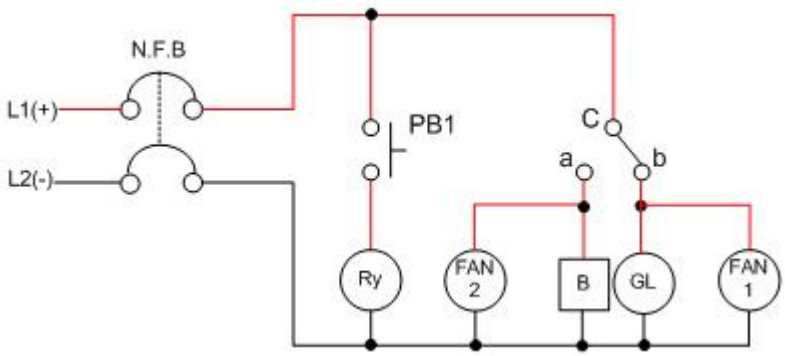

・Requirements

1. Prepare and inspect test equipment, tools and materials.
2. Use the test equipment, tools and materials to make and run a circuit with a banana jack.
3. Understand the relay circuit and its operation principles.
   (1) Explain the actions that occur when PB1 is pressed.
   (2) Explain the actions that occur when PB1 is released.
4. Use the test equipment, tools and materials to construct an actual circuit and run it.

	Criteria		Marks	Scores	Notes			
Evaluation Standards	Works (70)	Operation of circuit with banana jack	20					
		Operation of the actually wired circuit	20					
		Real circuit and wiring condition	10					
		Understanding and description on the circuit	20					
	Attitudes (10)	Working attitudes and safety issues	5					
		Usage of materials/tools and clear-up works afterwards	5					
	Time (20)	( ) points off for every ( ) minutes over the required time limit			Works	Attitudes	Time	Total Score

Assignment Title	4. 5. Experiment on "a" and "b" Contact Circuit using Magnetic Contactor (MC)	Time Required 8 Hours
Objective	① To understand the structure and operation principles of magnetic contactor (MC). ② To use "a" and "b" contacts of MC to operate a loading device. ③ To explain operation of "a" and "b" contact circuit with MC.	

Equipment	Tools and Materials	Specification	Quantity
- Solar Heat Hot Water Boiler test equipment (KTE-7000SB)	· Driver · Nipper · Wire Striper · Hook Meter	· #2× 6× 175㎜ · 150㎜ · .5~6㎟ · 300A 600V	1 1 1 1 per each group

Components of Solar Heat System

· **Controller Circuit**

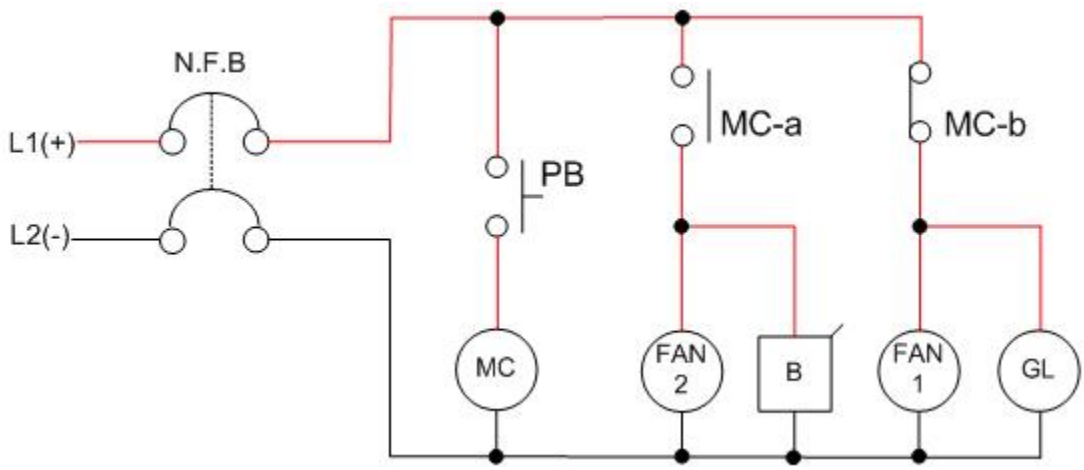

L1, L2 : Line potential

N.F.B : Overcurrent breaker

FAN1 : Heat emitting fan motor for heating

FAN2 : Heat emitting fan motor for overheating

MC-a : Magnetic contactor "a"contact

MC-b : Magnetic contactor "b"contact

B : Buzzer

PB1 : Push button switch

GL : Green Lamp

MC : Magnetic contactor coil

2. Magnetic contactor(MC : Magnetic Contactor)

Diagram 2. Magnetic contactor

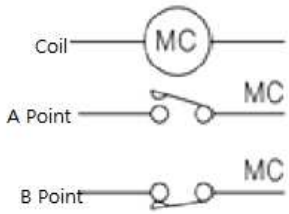

Diagram 3. Circuit Diagram

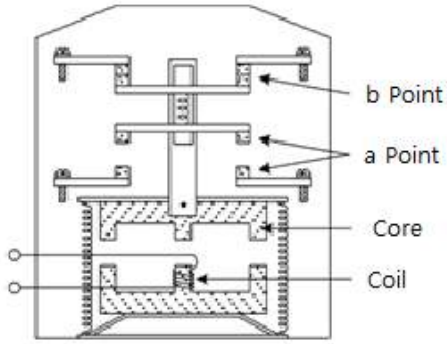

Diagram 4. Internal Structure

(1) The operation principle of MC is the same as that of an electrical contactor. In other words, it operates the contacting part using the absorption force of electromagnet and it is mostly used for closing/opening high currents or for frequent operating/stopping of motors. High-voltage MC is also used for opening/closing high-volatage circuits. MC can be divided into the main contact type for high current and auxiliary contact type for circuits (low currents).

3. “a" contact circuit and ”b" contact circuit

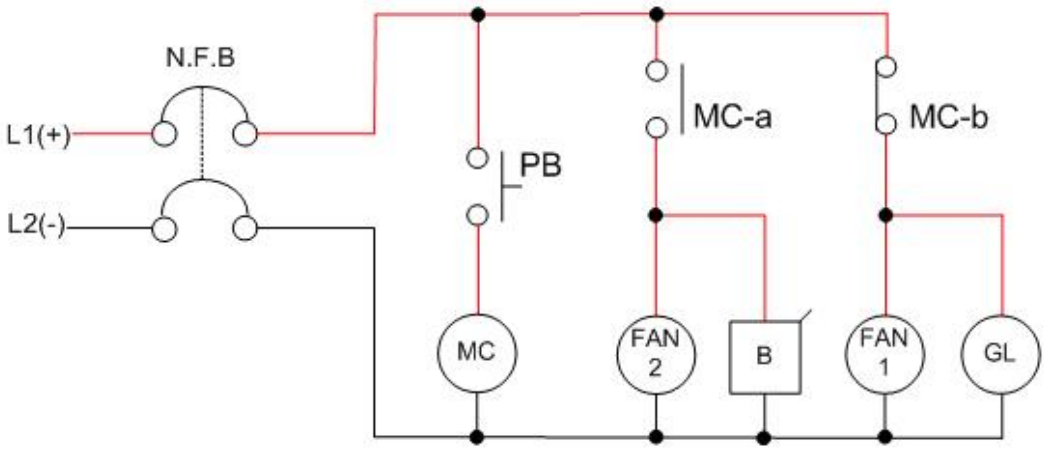

(1) When N.F.B switch is turned on, FAN1 and GL turns on since MC-b contact is closed and FAN2 and Buzzer turns off since MC-a contact is opened. (PB swtich is stays opened)

(2) When PB1 switch is closed, now the electrical coil on MC is energized with MC-a contact closed and MC-b contact opened, so FAN2a nd Buzzer turns on, whereas FAN1 and GL turns off.

(3) Arbeit contact means 『a working contact』 and is marked as “a”.

(4) Break contact means 『an opening contact』 and is marked as “b”.

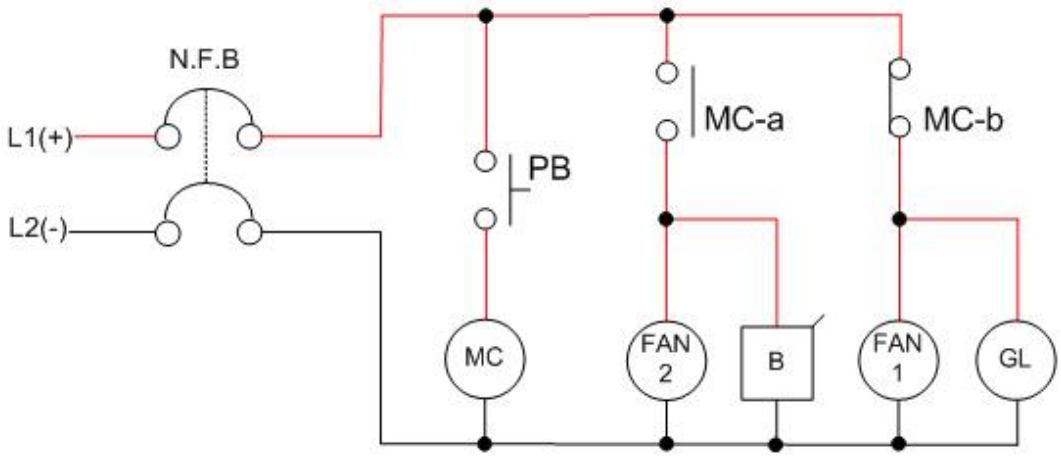

・Requirements

1. Prepare and inspect test equipment, tools and materials.
2. Use the test equipment, tools and materials to make and run a circuit with a banana jack.
3. Understand the MC circuit and its operation principles.
   (1) Explain the actions that occur when PB1 is pressed.
   (2) Explain the actions that occur when PB1 is released.
5. Explain “a” contact and “b” contact on a frozen electrical circuit.
6. Use the test equipment, tools and materials to construct an actual circuit.

	Criteria		Marks	Scores	Notes			
Evaluation Standards	Works (70)	Operation of circuit with banana jack	20					
		Operation of the actually wired circuit	20					
		Real circuit and wiring condition	10					
		Understanding and description on the circuit	20					
	Attitudes (10)	Working attitudes and safety issues	5					
		Usage of materials/tools and clear-up works afterwards	5					
	Time (20)	( ) points off for every ( ) minutes over the required time limit			Works	Attitudes	Time	Total Score

Assignment Title	5. 6. Construction and Operation of Reset Self-Holding Circuit	Time Required 8 Hours
Objective	① To construct and operate a reset self-holding circuit and understand the operation principles thereof. ② To explain the reset process of the self-holding circuit based on a circuit diagram.	

Equipment	Tools and Materials	Specification	Quantity
- Solar Heat Hot Water Boiler test equipment (KTE-7000SB)	• Driver • Nipper • Wire Striper • Hook Meter	• #2× 6× 175㎜ • 150㎜ • .5~6㎟ • 300A 600V	1 1 1 1 per each group

Components of Solar Heat System

· Controller Circuit

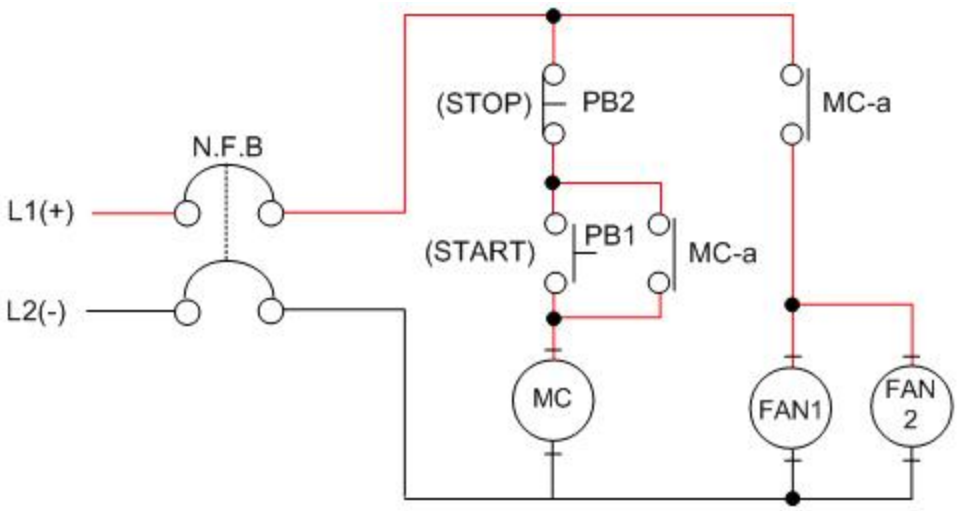

L1, L2 : Line potential

N.F.B : Over current breaker

MC-a : Magnetic contactor "a"contact

MC : Magnetic contactor Coil

FAN1 : Heat emitting fan motor for heating

FAN2 : Heat emitting fan motor for overheating

PB1 : Push button switch

2. Magnetic contactor(MC : Magnetic Contactor)

Diagram 2. Magnetic contactor

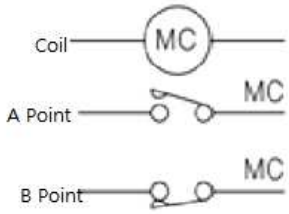

Diagram 3. Circuit Diagram

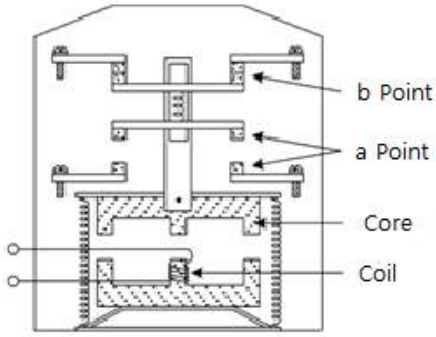

Diagram 4. Internal Structure

(1) The operation principle of MC is the same as that of an electrical contactor. In other words, it operates the contacting part using the absorption force of electromagnet and it is mostly used for closing/opening high currents or for frequent operating/stopping of motors. High-voltage MC is also used for opening/closing high-volatage circuits. MC can be divided into the main contact type for high current and auxiliary contact type for circuits (low currents).

3. “a" contact circuit and ”b" contact circuit

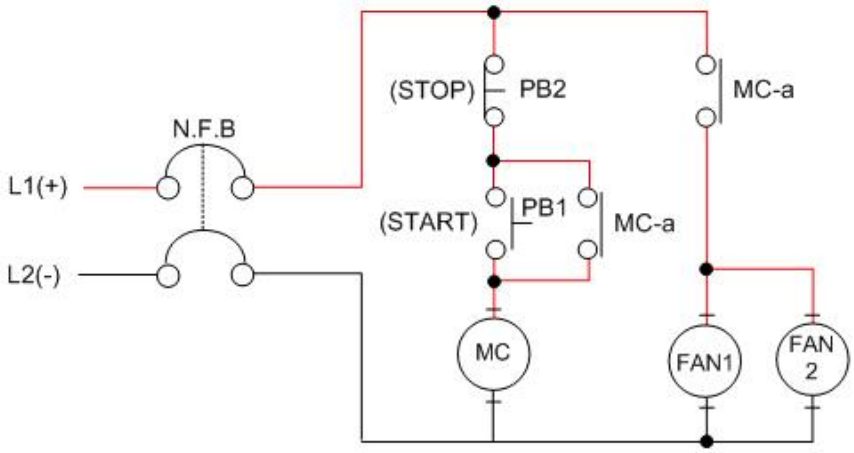

(1) When PB1 (START) button is turned ON while N.F.B switch is ON, the MC coil is energized and the main contact, an “a” contact circuit, is closed, so FAN1 and FAN2 starts to operate normally.

(2) When PB2 (START) button is turned OFF, the MC coil is demagnetized and “a”contact is opened, so FAN1 and FAN2 stops operating.

Assignment Title	6. 6. Construction and Operation of Reset Self-Holding Circuit	Time Required
		4

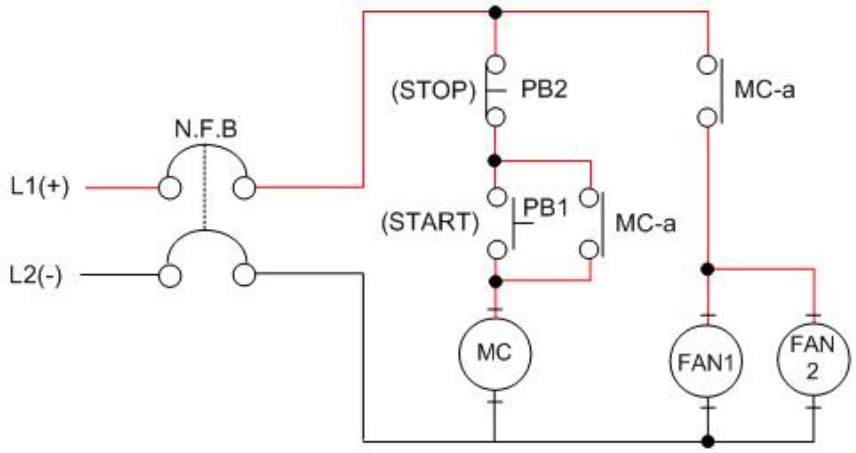

・Requirements

1. Prepare and inspect test equipment, tools and materials.
2. Use the test equipment, tools and materials to make and run a circuit with a banana jack.
3. Understand the reset self-holding circuit and its operation principles.
   (1) Explain the actions that occur when PB1 is pressed.
   (2) Explain the actions that occur when PB1 is released.
5. Explain “a” contact and “b” contact on the circuit.
6. Use the test equipment, tools and materials to construct an actual circuit.

Evaluation Standards	Criteria		Marks	Scores	Notes			
	Works (70)	Operation of circuit with banana jack	20					
		Operation of the actually wired circuit	20					
		Real circuit and wiring condition	10					
		Understanding and description on the circuit	20					
	Attitudes (10)	Working attitudes and safety issues	5					
		Usage of materials/tools and clear-up works afterwards	5					
	Time (20)	( ) points off for every ( ) minutes over the required time limit			Works	Attitudes	Time	Total Score

Assignment Title	7. 7. Construction and Operation of Temperature Switch Heater Controller Circuit	Time Required 8 Hours
Objective	① To handle the temperature switch controller and understand the principles thereof. ② To use a circuit diagram to connect the temperature switch controller with a device to drive.	

Equipment	Tools and Materials	Specification	Quantity
- Solar Heat Hot Water Boiler test equipment (KTE-7000SB)	• Driver • Nipper • Wire Striper • Hook Meter	• #2× 6× 175㎜ • 150㎜ • .5~6㎟ • 300A 600V	1 1 1 1 per each group

Components of Solar Heat System

· Controller Circuit

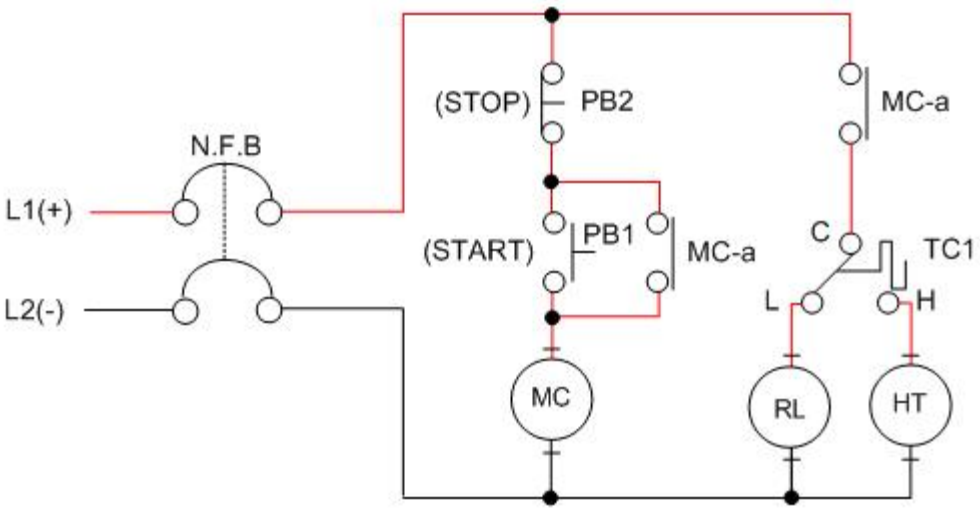

L1, L2 : Line potential

N.F.B : Over current breaker

HT : Thermal Storage Tank Aux. Heater

MC-a : Magnetic contactor "a"contact

MC-b : Magnetic contactor "b"contact

PB1 : Push button switch

RL : Red Lamp

MC : Magnetic contactor Coil

2. Temperature Controller (TC)

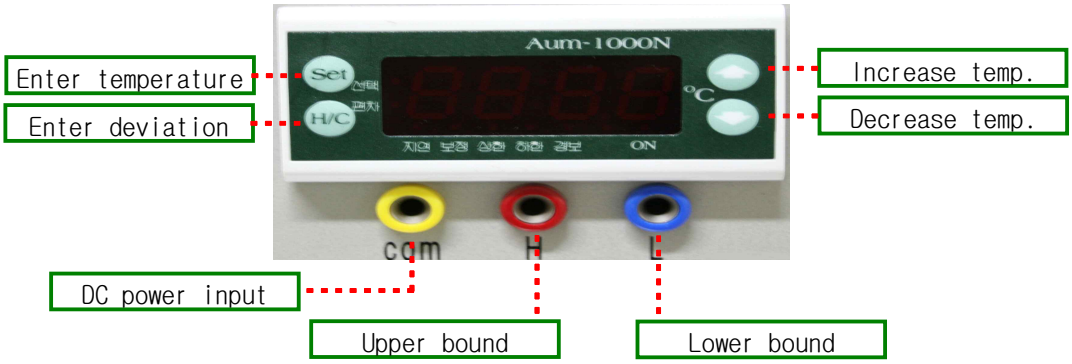

Temperature Controller

It is a part used for turning an equipment on or off by setting temperature values.

① Press enter temperature button to set desired value.
② Press increase and decrease temperature buttons to enter values.
③ Press enter deviation to set deviation value.
④ Apply + power on com.
⑤ Apply + end of power on H or L according to the connected device.

(1) The temperature switches controls otuput device by changing the “a” and “b” contacts according to the temperature setting.

3. “a" contact circuit and ”b" contact circuit

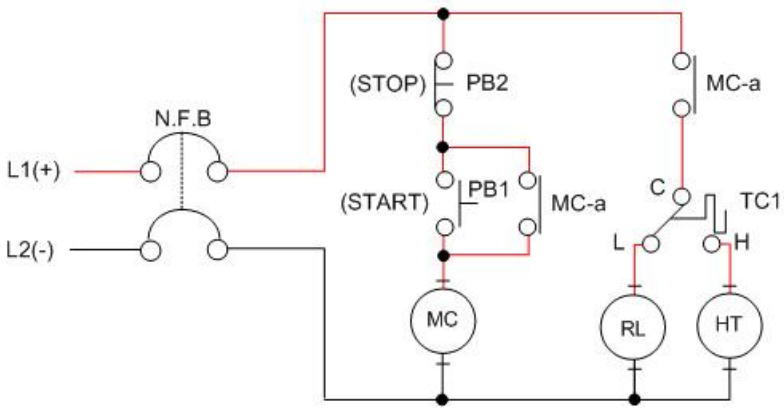

(1) When PB1 (START) button is turned ON while N.F.B switch is ON, the MC coil is energized and the main contact, an “a” contact circuit, is closed, so power is applied on TC1. If the temperature is higher than the setting, RL turns on and otherwise heater starts to operate.
(2) When PB2 (START) button is turned OFF, the MC coil is demagnetized and “a”contact is opened, so TC1 stops.

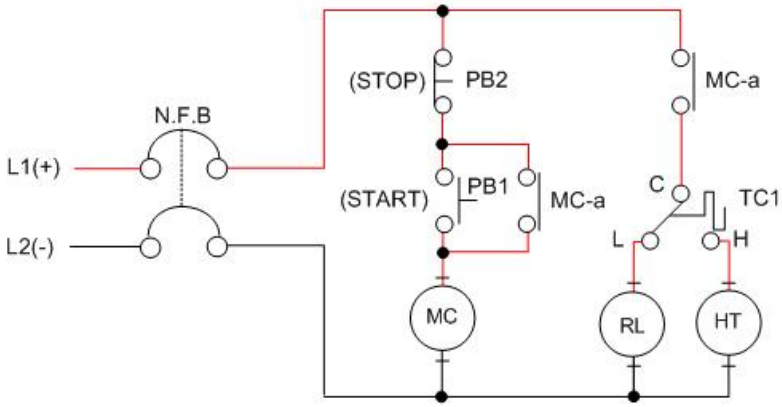

・Requirements

1. Prepare and inspect test equipment, tools and materials.
2. Use the test equipment, tools and materials to make and run a circuit with a banana jack.
3. Understand the principles of temperature switches and be able to set the values according to the setting values for automatic control.
4. Understand the circuit and its operation principles.
   (1) Explain the actions that occur when PB1 is pressed.
   (2) Explain how opening the temperature switch while the solar heat system operates stops the heater from operating.
   (3) Explain how closing the temperature switch while the solar heat system operates starts the heater to operate.
   (4) Explain the actions that occur when PB2 is pressed.
5. Use the test equipment, tools and materials to construct an actual circuit.

	Criteria		Marks	Scores	Notes			
Evaluation Standards	Works (70)	Operation of circuit with banana jack	20					
		Operation of the actually wired circuit	20					
		Real circuit and wiring condition	10					
		Understanding and description on the circuit	20					
	Attitudes (10)	Working attitudes and safety issues	5					
		Usage of materials/tools and clear-up works afterwards	5					
	Time (20)	( ) points off for every ( ) minutes over the required time limit			Works	Attitudes	Time	Total Score

Assignment Title	8. 8. Construction and Operation of Heat Collecting Circulation Pump using Temperature Difference Controller	Time Required 8 Hours
Objective	① To handle the Temperature Difference Controller and understand the principles thereof. ② To use a circuit diagram to explain controlled device and operation principle of the Temperature Difference Controller circuit.	

Equipment	Tools and Materials	Specification	Quantity
- Solar Heat Hot Water Boiler test equipment (KTE-7000SB)	• Driver • Nipper • Wire Striper • Hook Meter	• #2× 6× 175㎜ • 150㎜ • .5~6㎟ • 300A 600V	1 1 1 1 per each group

Components of Solar Heat System

· Controller Circuit

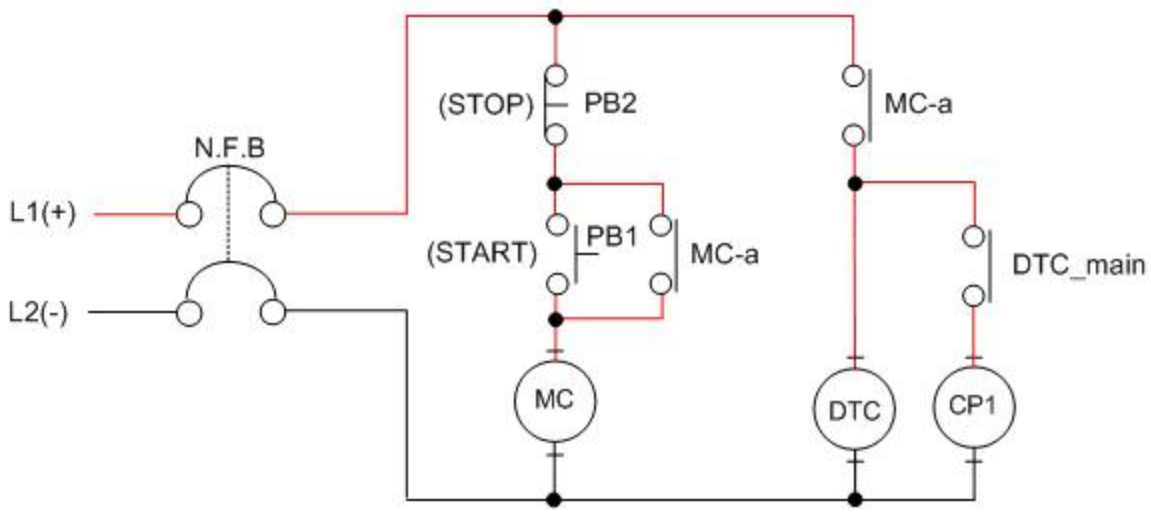

L1, L2 : Line potential

N.F.B : Overcurrent breaker

DTC : Temperature Difference Controller

MC-a : Magnetic contactor "a"contact

CP : Circulating Pump

MC-b : Magnetic contactor "b"contact

PB1 : Push button switch

DTC_main : Temperature Difference Controller contact

MC : Magnetic contactor Coil

2. Temperature Difference Controller

Temperature Difference Controller

(1) Temperature Difference Controller controls device by changing the “a” and “b” contacts if the difference between the input and output temperatures is greater than the setting.

(2) How to set Temperature Difference Controller

Measured Values (PV)	Indication of the value measured using the sensor	
Set Values (SV)	Indication of the values set for main output	
Indication of output	*	Show temp, output cooler operation
	♨	Show temp, output heater operation
	RY	Show temp, output ON/OFF
	PRO	Show aux, output ON/OFF
Operation	set	Mode selection setting button
	up	Setting value increasing button
	dn	Setting value decreasing button
	pwr	Main/aux, output force ON/OFF button

(3) Principles of Temperature Difference Control

○ When circulating pump is stopped

① (Temp. at collector output - Temp. at collector input) > ΔT_{ON} : CP operates

② (Temp. at collector output - Temp. at collector input) < ΔT_{ON} : CP stays stopped

○ When circulating pump is operating

③ (Temp. at collector output - Temp. at collector input) > ΔT_{OFF} : CP keeps operating

④ (Temp. at collector output - Temp. at collector input)< ΔT_{OFF} : CP stops

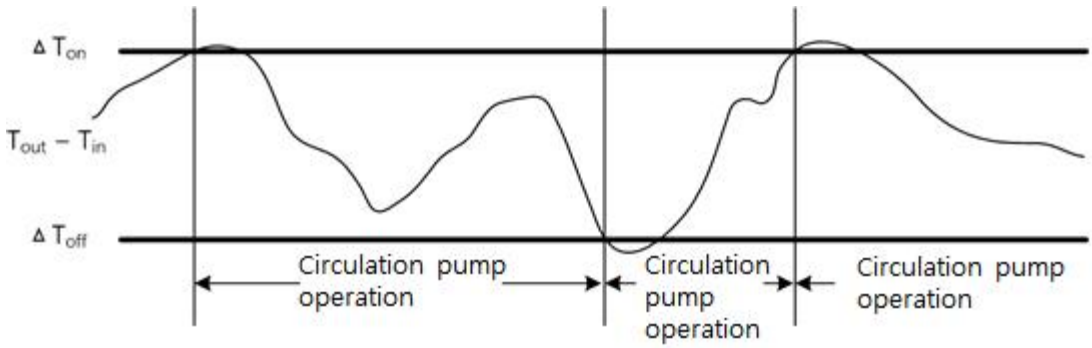

3. "a" contact circuit and "b" contact circuit

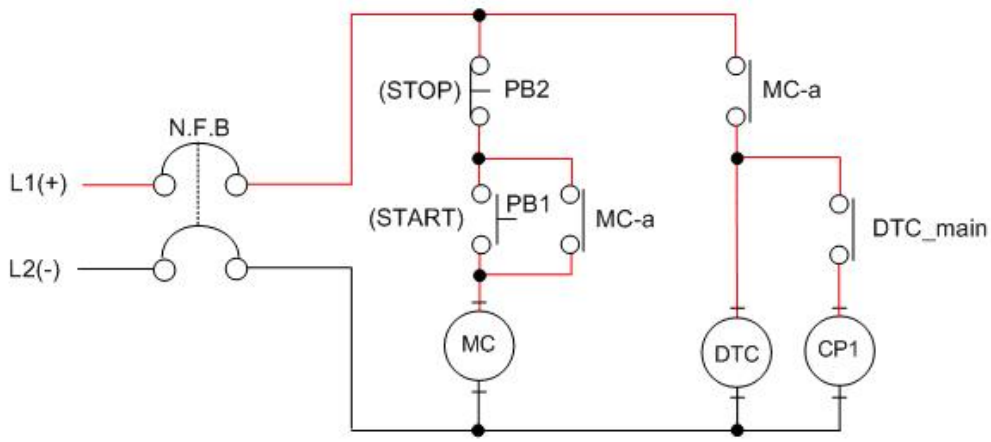

(1) When PB1 (START) button is turned ON while N.F.B switch is ON, the MC coil is energized and the main contact, an “a” contact circuit, is closed, so power is applied on DTC. If the temperature difference is greater than the setting, CP1 starts operating and otherwise CP1 stops.

(2) When PB2 (START) button is turned OFF, the MC coil is demagnetized and “a”contact is opened, so DTC stops.

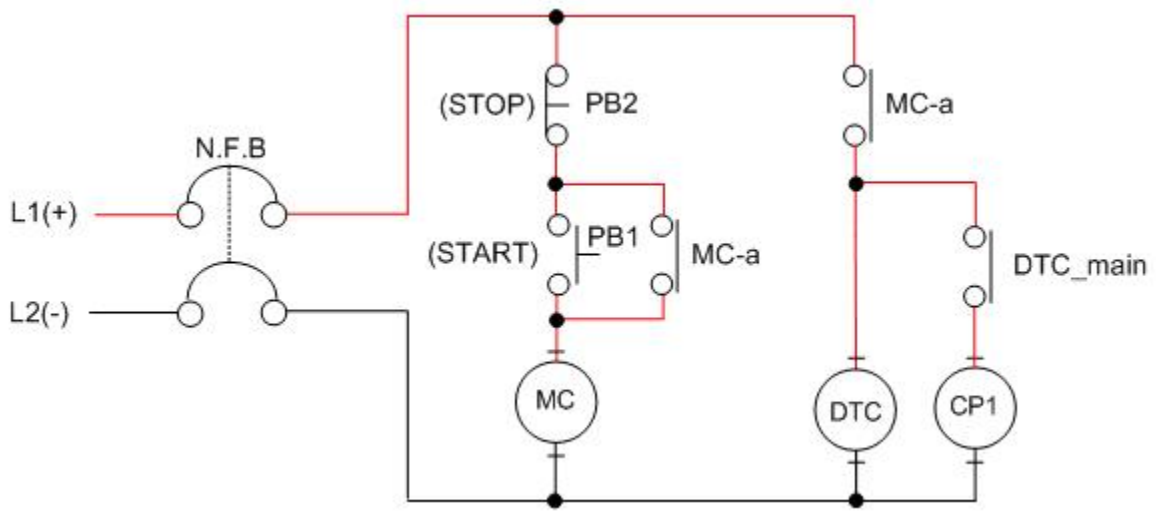

・Requirements

1. Prepare and inspect test equipment, tools and materials.
2. Use the test equipment, tools and materials to make and run a circuit with a banana jack.
3. Understand the principles of temperature difference controller and be able to set the values according to the setting values for automatic control.
4. Understand the circuit and its operation principles.
   (1) Explain the actions that occur when PB1 is pressed.
   (2) Explain how the temperature difference controller works while the solar heat system operates to control the circulating pump.
   (3) Explain the actions that occur when PB2 is pressed.
5. Use the test equipment, tools and materials to construct an actual circuit.

Evaluation Standards	Criteria		Marks	Scores	Notes			
	Works (70)	Operation of circuit with banana jack	20					
		Operation of the actually wired circuit	20					
		Real circuit and wiring condition	10					
		Understanding and description on the circuit	20					
	Attitudes (10)	Working attitudes and safety issues	5					
		Usage of materials/tools and clear-up works afterwards	5					
	Time (20)	( ) points off for every ( ) minutes over the required time limit			Works	Attitudes	Time	Total Score

Assignment Title	9. 9. Construction of Heat Storage/Emission Convertible Circuit using 3-Way Valve	Time Required 8 Hours
Objective	① To handle 3-Way Valve and understand the operation principles thereof. ② Use a circuit diagram to construct a heat storage/emission convertible circuit according to the operation requirements.	

Equipment	Tools and Materials	Specification	Quantity
- Solar Heat Hot Water Boiler test equipment (KTE-7000SB)	• Driver • Nipper • Wire Striper • Hook Meter	• #2× 6× 175㎜ • 150㎜ • .5~6㎟ • 300A 600V	1 1 1 1 per each group

Components of Solar Heat System

· Controller Circuit

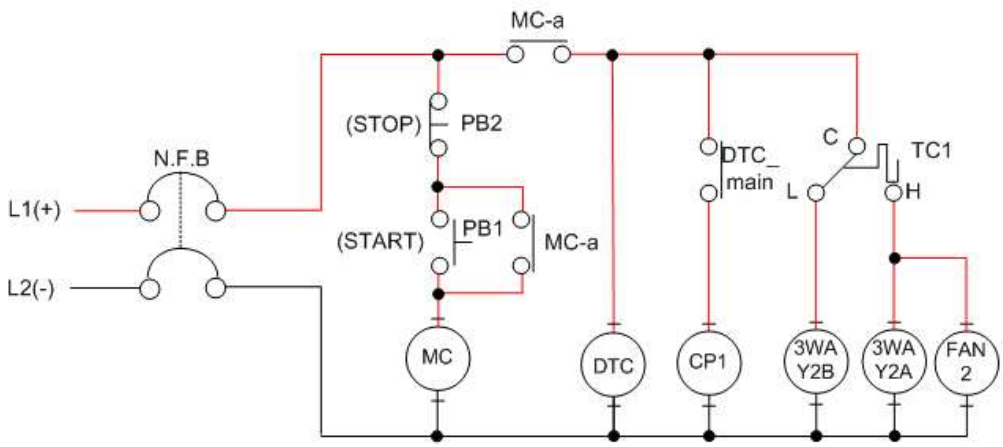

L1, L2 : Line potential

N.F.B : Overcurrent breaker

DTC : Temperature Difference Controller

MC : Magnetic contactor Coil

CP : Circulating Pump

3WAY2_B : 3-Way Valve Direction B

MC-a : Magnetic contactor "a"contact

PB1 : Push button switch

DTC_main : Temperature Difference Controller contact

FAN2 : Heat emitting fan motor for overheating

3WAY2_A : 3-Way Valve Direction A

2. 3-Way Valve

3-Way Valve

(1) It is used to tightly close or open the flow ways in two directions and it converts heating water inside thermal storage tank or boiler.

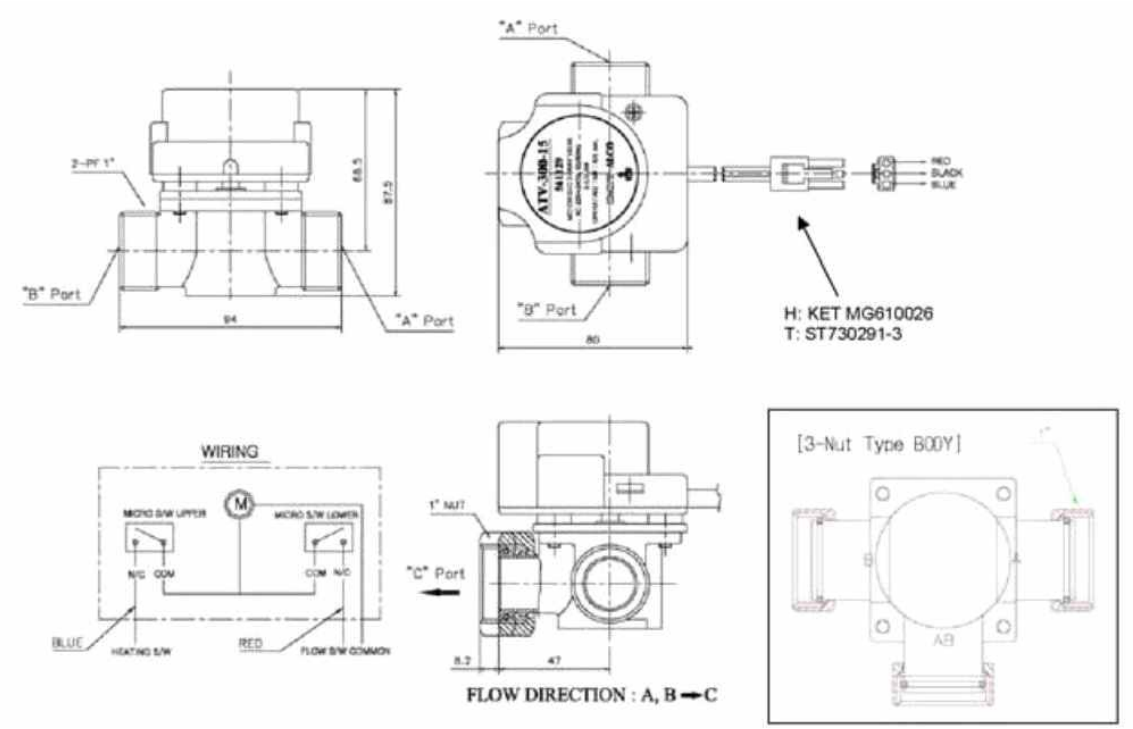

3. "a" contact circuit and "b" contact circuit

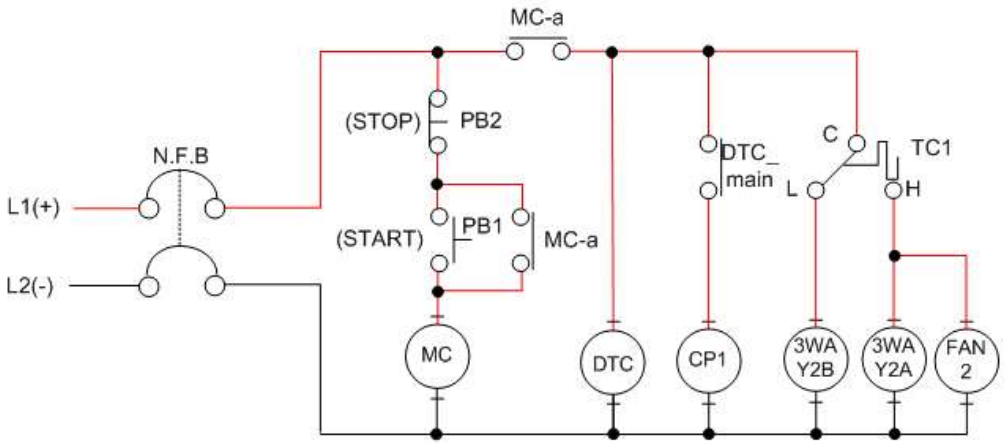

(1) When PB1 (START) button is turned ON while N.F.B switch is ON, the MC coil is energized and the main contact, an “a” contact circuit, is closed, so power is applied on DTC. If the temperature difference is greater than the setting, CP1 starts operating and otherwise CP1 stops.

(2) If power is applied on TC1, value 2 on 3-way valve is fixed in “B” direction so hot water can circulate. If temperature of thermal storage tank exceeds the TC1 setting value, the value changes direction to “A” and a heat emitting fan motor for overheating starts to operate.

(2) When PB2 (START) button is turned OFF, the MC coil is demagnetized and “a”contact is opened, so TC1 stops.

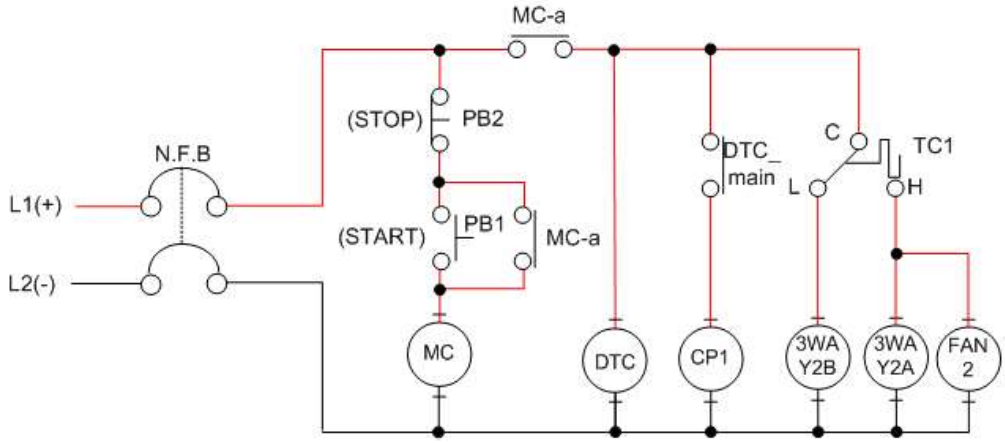

• Requirements

1. Prepare and inspect test equipment, tools and materials.
2. Use the test equipment, tools and materials to make and run a circuit with a banana jack.
3. Understand the principles of temperature switches and be able to set the values according to the setting values for automatic control.
4. Understand the circuit and its operation principles.
   (1) Explain the actions that occur when PB1 is pressed.
   (2) Explain how 3-way value works while the solar heat system operates.
   (3) Explain how the 3-way valve changes trajectories and how the heat emitting fan motor for overheating works while the solar heat system operates.
   (4) Explain the actions that occur when PB2 is pressed.
5. Use the test equipment, tools and materials to construct an actual circuit.

Evaluation Standards	Criteria		Marks	Scores	Notes			
	Works (70)	Operation of circuit with banana jack	20					
		Operation of the actually wired circuit	20					
		Real circuit and wiring condition	10					
		Understanding and description on the circuit	20					
	Attitudes (10)	Working attitudes and safety issues	5					
		Usage of materials/tools and clear-up works afterwards	5					
	Time (20)	( ) points off for every ( ) minutes over the required time limit			Works	Attitudes	Time	Total Score

Assignment Title	10. 10. Experiment on the Charging Circuit for Solar Heat Collector	Time Required 8 Hours
Objective	① To construct the desired circuit and charge heat collecting medium in an order.	

Equipment	Tools and Materials	Specification	Quantity
- Solar Heat Hot Water Boiler test equipment (KTE-7000SB)	· Driver · Nipper · Wire Striper · Hook Meter	· #2× 6× 175㎜ · 150㎜ · .5~6㎟ · 300A 600V	1 1 1 1 per each group

Components of Solar Heat System

· **Controller Circuit**

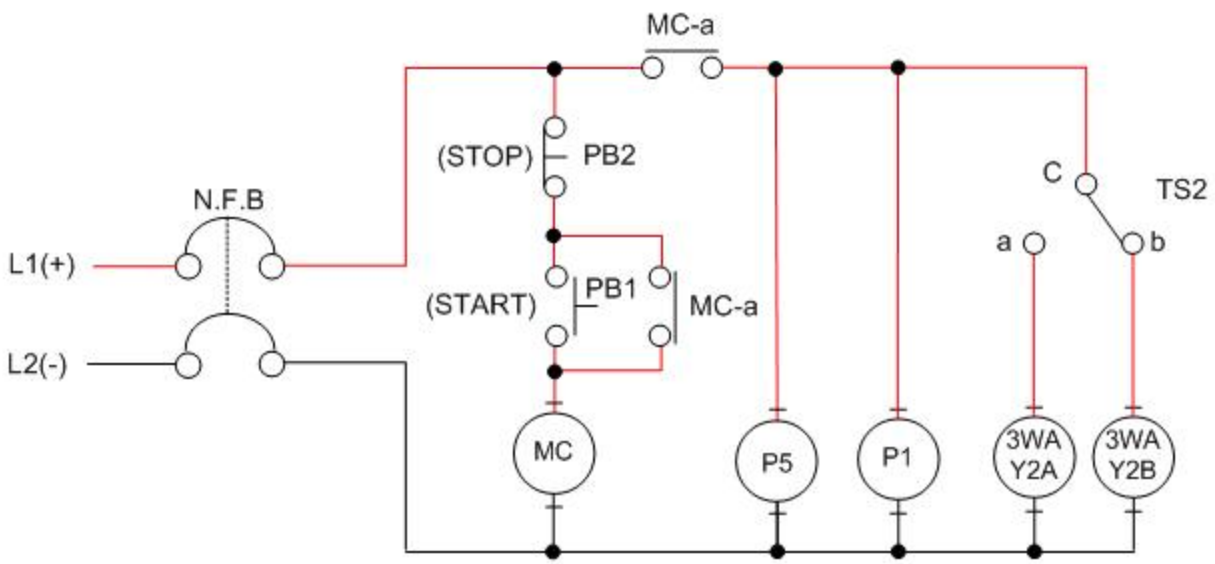

L1, L2 : Line potential

MC-a : Magnetic contactor "a"contact

N.F.B : Overcurrent breaker

PB1 : Push button switch

TS : Temperature Switch

MC : Magnetic contactor Coil

P1 : Circulating Pump

P5 : Pressurizing Pump

3WAY2_B : 3-Way Valve Direction B

3WAY2_A : 3-Way Valve Direction A

3. "a" contact circuit and "b" contact circuit

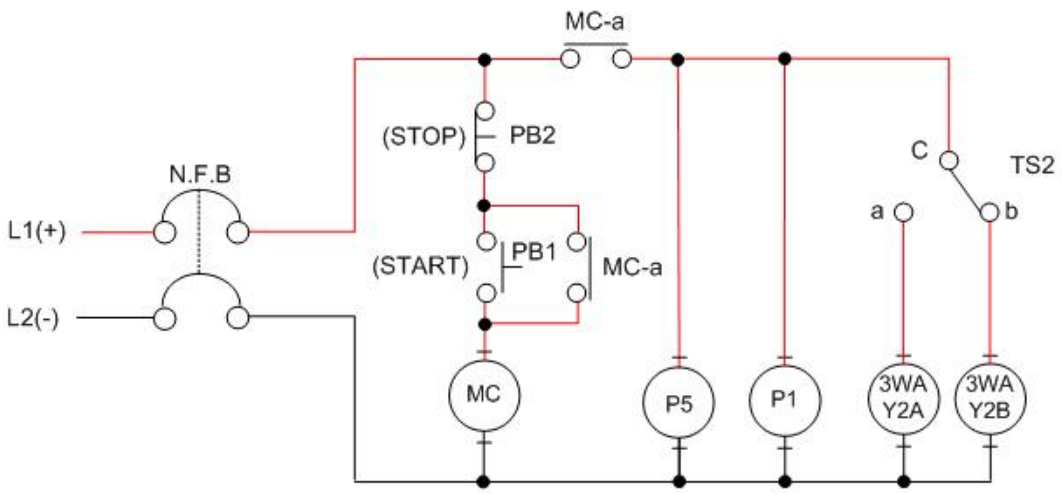

(1) Construct the circuit and oepn the manual valve on circulating line of heat collector so the thermal medium can easily move through.
(2) Open the air valve at the top of heat collector as much as possible.
(3) Fill the make-up heat medium tank with clean water.
(4) Press PB1 button to operate P5 and P1 and check the pressure gauze at the top of the heat collector. If 1 bar is reached, change TS to a contact to supply thermal medium to overheat protecting line.
(5) If no air bubbles show in small-area flowmeter, press PB2 to stop.

1. Close drain valve on water tank→fill water(6kg)
2. Construct circuit and open the manual valve on heat collecting line
3. DC24V Power on
4. Press PB1(START)→P1 and P5 operates
5. See the pressure gauze and area-based flowmeter at the top of the heat collector to check water inside (1bar)
6. Turn T·S ON to charge water in pippes of overheat protector

Assignment Title	11. 11. Experiment on the Charging Circuit for Solar Heat Storage Tank	Time Required 8 Hours
Objective	① To construct the circuit and perform inspection to check the thermal medium is fully charged.	

Equipment	Tools and Materials	Specification	Quantity
- Solar Heat Hot Water Boiler test equipment (KTE-7000SB)	• Driver • Nipper • Wire Striper • Hook Meter	• #2× 6× 175㎜ • 150㎜ • .5~6㎟ • 300A 600V	1 1 1 1 per each group

Components of Solar Heat System

· Controller Circuit

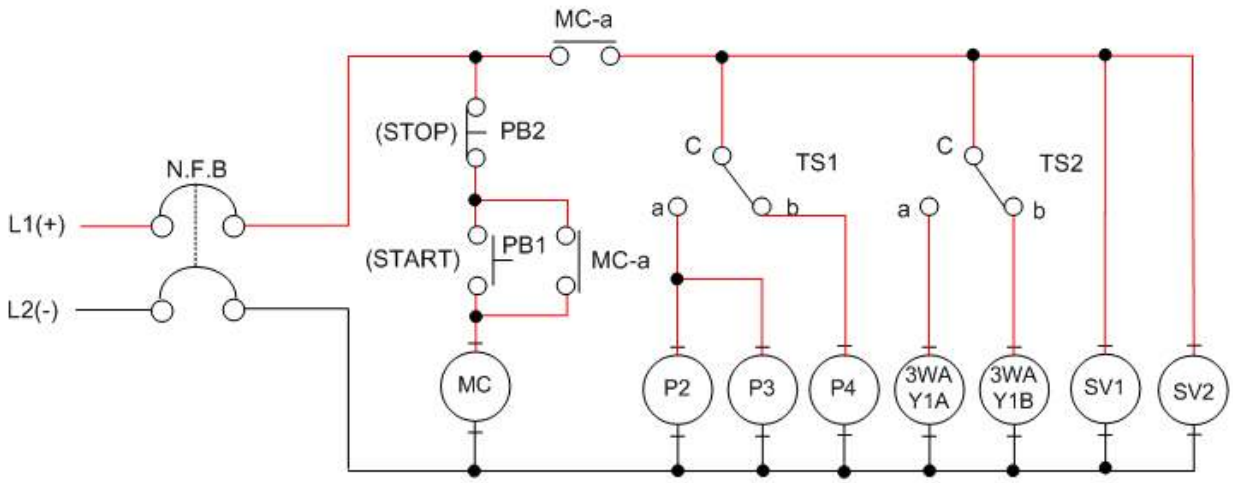

L1, L2 : Line potential

MC-a : Magnetic contactor "a"contact

N.F.B : Overcurrent breaker

PB1 : Push button switch

TS : Toggle switch

MC : Magnetic contactor Coil

P2,3 : Circulating Pump

P4 : Pressurizing Pump

3WAY2_B : 3-Way Valve Direction B

3WAY2_A : 3-Way Valve Direction A

SV : Solenoid Valve

3. "a" contact circuit and "b" contact circuit

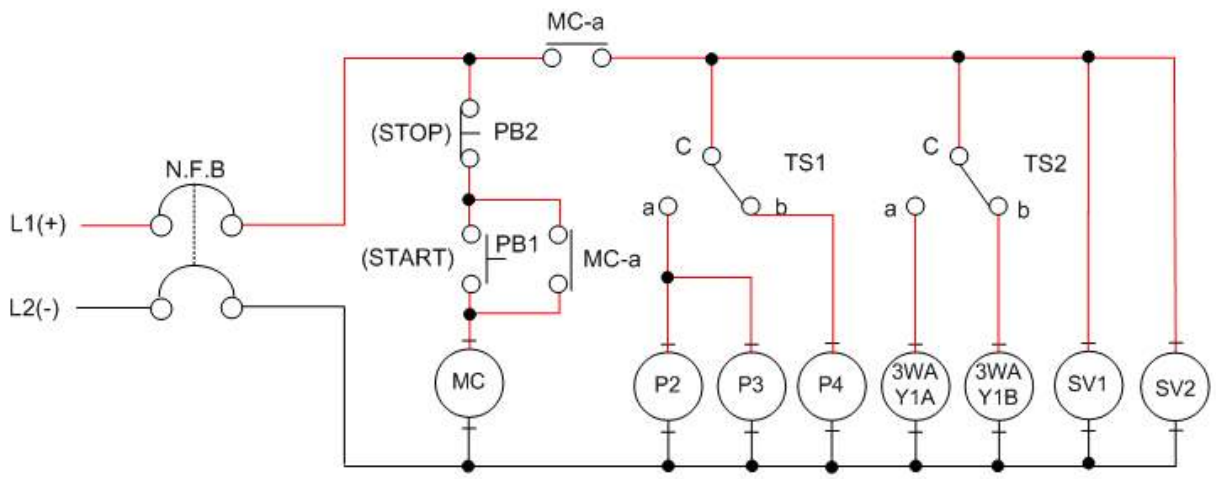

(1) Construct the circuit
(2) Open the manual valve on heating water supply lines
(3) Since the water pressure may cause overflow of water from the tank, make sure to keep the valve in "A" direction
(4) Fill the water tank with clean water
(5) Press PB1 to P4, open the 3WAY valve in B direction, and open both SV1 and SV2
(6) Once the thermal storage tank is fully supplied with water, change TS1 and TS2 to a contact to operate P2 and P3. Then change the line to thermal storage tank and heat exchanger for heating to supply heating water to the thermal storage lines and heating water pipes.
(7) Once the thermal storage tank and the pipes are fully supplied with water, press PB2 while Toggle2 is turned ON to stop PB2. (When turned OFF, water inside the thermal storage tank may flow backwards into water tank, causing overflow)

1. Close drain valve of water tank
2. Open the cover of the water tank to refill water
3. Create a circuit diagram (Keep toggle 1 and 2 off)
4. Press PB1 Start button

Assignment Title	12. 12. Construction of Driving Circuit for Heat Collection and Storage using Temperature Difference Control	Time Required 8 Hours
Objective	① To find out the functions of Temperature Difference Controller. ② To understand the principles of Temperature Difference Control and set the temperature difference value. ③ To use a circuit diagram to describe the operation principle.	

Equipment	Tools and Materials	Specification	Quantity
- Solar Heat Hot Water Boiler test equipment (KTE-7000SB)	• Driver • Nipper • Wire Striper • Hook Meter	• #2× 6× 175㎜ • 150㎜ • .5~6㎟ • 300A 600V	1 1 1 1 per each group

Components of Solar Heat System

· Controller Circuit

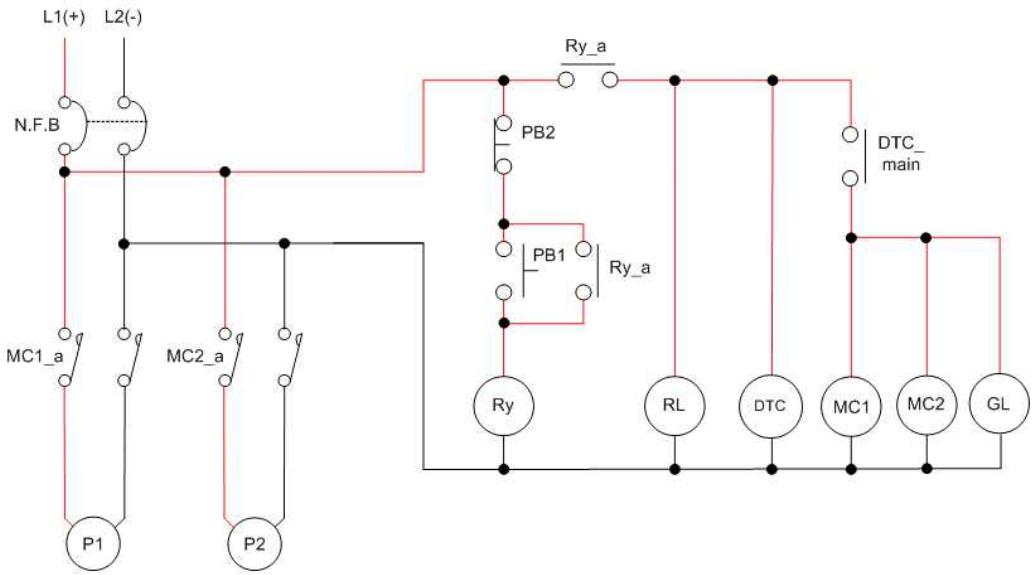

L1, L2 : Line potential

N.F.B : Over current breaker

DTC : Temperature Difference Controller

MC : Magnetic contactor Coil

P1 : Circulating Pump

Ry_a : Relay a contact

GL : Green Lamp

MC-a : Magnetic contactor "a"contact

PB1 : Push button switch

DTC_main : Temperature Difference Controller contact

Ry : Relay

P2 : 3-Way Valve Direction A

Ry_b : Relay b contact

RL : Red Lamp

3. "a" contact circuit and "b" contact circuit

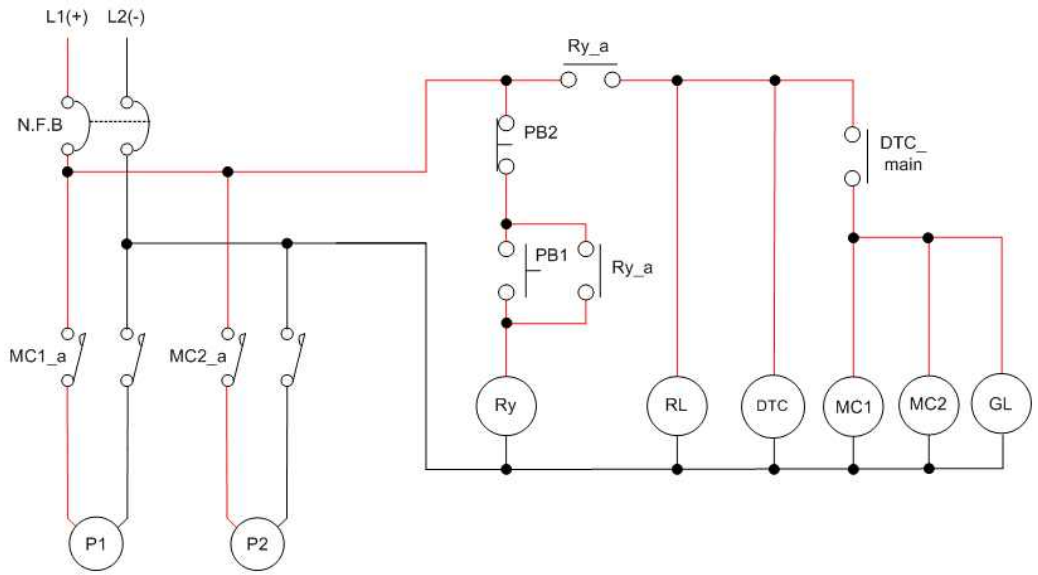

(1) Create the Controller Circuit.

(2) If you press PB2 button, self-holding circuit will be completed and power will be supplied to Temperature Difference Controller (DTC).

(3) According to the temperature difference value set on the controller, power is applied to or cut from MC1 and MC2. If power is applied, GL will turn on and heat collection/storage pump will start operating.

1. Construct the circuit diagram using banana jack.
2. Use Temperature Difference Controller (DTC) to set the desired values for operation and stop.
3. Put an artificial lighting in front of the heat collector and turn the light on.
4. Press PB1 (START) button to run the self-holding circuit
   (1) As the radiant energy from the artificial lighting is transferred, the PV value (temperature at the output of the collector) of DTC will increase.
   (2) According to the temperature difference value of DTC, P1(heat collecting circulation pump) or P2(heat storage circulation pump) will start operating to increase temperature of the thermal storage tank.
5. Once all experiment is over, press PB2 (STOP) button to turn the circuit to reset state.

5. Cautions in Handling the Equipment

5-1. Power Supply

(1) This test equipment requires main power of AC220V to operate.
(2) Fill the make-up water tank with water. (Since the equipment runs electrically, make sure no electrical parts other than the water tank is immersed in water.)
(3) The order to operating the equipment is as follows. Turn on N.F.B while the power cord is plugged in.

5-2. Equipment Device

(1) The solar energy collector is made of glass with a vacuum state inside, so be careful not to damage it.
(2) All functions of machinery equipment operates only with organized electrical circuits.
(3) The test equipment is shipped from the factory after completely welded. Random dissembling and reassembling of the equipment may cause malfunctioning or failure of the equipment. In such cases, you may be charged for repair works when you request for an A/S.

5-3. Overall Conditions

(1) Make sure to fully understand the manual and ways of handling the equipment before working with it.
(2) If the equipment malfunctions because of dissembling or modification, you may be charged for repair works, even during the free A/S period.
(3) For more inquiries on the malfunctioning and operation of the equipment, feel free to contact the head office.

5-4. Operation and Control

(1) Before Education
① Check that the drain valve on water storage tank is closed (leakage of water during water supply may cause malfunctioning of the controller or the equipment)
② Check that the pipe valves on the energy collector and energy storage tank are opened (drain valves remain closed)
③ Check that the pipe valves on the energy collector and load are opened (drain valve and motor-valves on each load remain closed)
④ Check the amount of water inside the make-up water tank (About 2/3 point from the bottom)

⑤ Switch the main power of controller ON (Check the red light on AC lamp and the temperature indicator)

(2) After Education

① Once all parts of the equipment are checked to be operating normally, clear up all the banana jack.

② Remove water from the pipes and water storage tank.

③ Put the artificial lighting to its original position and remove the main power cord. (display powered off)

◎ Warrantee and A/S application sheet

Product Warrantee Certification

Fill out this sheet, and send by Fax or E-mail..

MODEL		
WARRENTEE TERM	1 YEAR	
PURCHASING DATE	(M/D/Y)	
ORGANIZATION	**SCHOOL**	
	DEPARTMENT	

TEL : +81-31-749-5373 | FAX : +81-31-749-5376 | kteng@kteng.com | http://www.kteng.com
HEAD OFFICE : 679-7 Shinhyen-ri opo-eup, gwangju-si, geonggi-do, KOREA 464-895
Factory : 133-1 Shinhyen-ri opo-eup, gwangju-si, geonggi-do, KOREA 464-895

Regrigeration & Air conditioning, Renewable energy training equipment

※ For more information, please mark the list below with the required contents and send it to overseas@kteng.com or by fax: +82-31-749-5376

Model	Specification	Manual	Education Data (PPT·Book)
KTE-1000BA			
KTE-1000RA			
KTE-1000BO			
KTE-1000MO			
KTE-2000EV			
KTE-2000EP			
KTE-3000HD			
KTE-5000LT			
KTE-6000BR			
KTE-9000AU			
KTE-1000AHU			
KTE-2000AHU			
KTE-4000PL			
KTE-4000SQ			
KTE-DA100			

Model	Specification	Manual	Education Data (PPT·Book)
KTE-7000HS			
KTE-7000ISG			
KTE-7000SG			
KTE-7000SH			
KTE-7000WG			
KTE-7100ASG			
KTE-7100AWG			
KTE-DA100M			
KTE-HB520N			
KTE-7000GH			
KTE-7000PVT			
KTE-7000SB			
KTE-7000SR			
KTE-7000SW			
KTE-7000SQ			
KTE-7000PL			

TEL : 82-31-749-5373 | FAX : 82-31-749-5376
overseas@kteng.com | http://www.kteng.com
11, Meorusut-gil, Opo-eup, Gwangju-si, Gyeonggi-do, 12771, South Korea

Educational lab equipment training programs

KTE-101 : Standard Refrigeration System Experiment Practical Course
KTE-102 : Refrigerant Parallel Valve Automatic Control Experiment Practical Course
KTE-103 : E.P.R(Evaporation Pressure Parallel Control) Refrigeration Experiment Practical Course
KTE-104 : Heat Pump System Performance Experiment Practical Course
KTE-105 : Cryogenic Cold & Heat(Dual Refrigeration) System Performance Experiment Practical Course
KTE-106 : Brine Refrigeration(Ice-storage Refrigeration) System Performance Experiment Practical Course
KTE-107 : Vehicular Heating and Cooling Performance Experiment Practical Course
KTE-108 : Air-conditioning System Performance Experiment Practical Course
KTE-109 : Chiller Method Air-conditioning System Performance Experiment Practical Course
KTE-201 : Solar・Wind Power Control Basic Circuit Configuration Practice
KTE-202 : Solar Generation Test Practice
KTE-203 : Solar System Equipment Configuration Practice
KTE-204 : Wind Power Generation Test Practice
KTE-205 : Solar・Wind Power Hybrid Generation Practice
KTE-206 : Hydrogen Fuel Cell Generation Practice
KTE-301 : Solar Radiant Energy Measurement Practical Experiment
KTE-302 : Solar Hot water boiler Performance Practical Experiment
KTE-303 : Geothermal Heat Pump Cooling & Heating Practical Experiment
KTE-304 : Solar-Thermal Combined Geothermal System Practical Experiment
KTE-401 : LED Basic Theory & Performance Assessment Practice
KTE-402 : LED Application System Configuration Practice
KTE-403 : LED Lighting Equipment Practice
KTE-404 : LED Media Facade Lighting Practice
KTE-405 : LED Luminescent property analysis Experiment
KTE-406 : OLED Unit Element Characteristic Evaluation Experiment
KTE-501 : PLC Automation Control Practice Basic
KTE-502 : PLC Automation Control Practice Intermediate
KTE-503 : PLC Automation Control Basic Advanced
KTE-601 : Sequence Control Practical Basic Course
KTE-602 : Sequence Control Practical Intermediate Course
KTE-603 : Sequence Control Practical Advanced Course
KTE-701 : Power Equipment Basic Course
KTE-702 : Power Equipment Intensive Course
KTE-901 : Water-based Fire Extinguishing Equipment
KTE-902 : Gas Fire Extinguishing Equipment
KTE-903 : Alarm Equipment
KTE-904 : Fire Extinguisher
KTE-905 : Evacuation Equipment
KTE-1101 : Robot Control Practical Basic Course
KTE-1102 : Robot Control Practical Intermediate Course
KTE-1103 : Robot Control Practical Advanced Course
KTE-1201 : Welding Machine Practical Basic Course
KTE-1202 : Welding Machine Practical Intermediate Course
KTE-1203 : Welding Machine Practical Advanced Course
KTE-1301 : Basic Pneumatic Practice
KTE-1302 : Electro-pneumatic Basic Practice
KTE-1303 : Electro-pneumatic Intermediate Practice
KTE-1401 : Automatic Control Mechatronics Basic Practice
KTE-1402 : Automatic Control Mechatronics Intermediate Practice
KTE-1403 : Automatic Control Mechatronics Advanced Practice

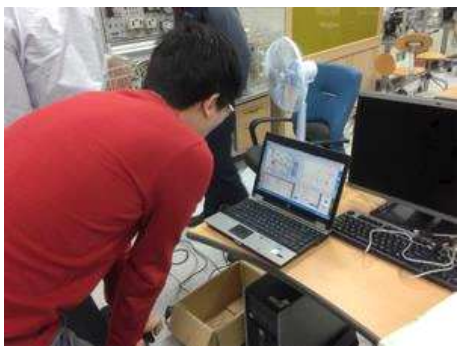

※ Please contact us for educational training program registration

Renewable Energy / Refrigeration & Air-conditioning & Welding
Automation controls(PLC) / Robot controls / Electric & Electronics(LED lighting)
Firefighting & safety / Big data & ICT / Automobile & ship / Nano chemical

3E EDUCATION ENGINEERING ENVIRONMENT

KTENG CORPORATION

KTENG Co., Ltd.
TEL: 82-31-749-5373 | FAX: 82-31-749-5376
overseas@kteng.com | http://www.kteng.com
11, Meorusut-gil, Opo-eup, Gwangju-si,
Gyeonggi-do, 12771, South Korea