Code : KTE7000ISG-AE100

SOLAR POWER GENERATION PRACTICE EXPERIMENTAL EQUIPMENT
Ver.1.0.0

TEL : +81-31-749-5373 | FAX : +81-31-749-5376 | kteng@kteng.com | http://www.kteng.com
Head Office: (464-895) 679-7, Shinhyeon-ri, Opo-eub, Gwangjoo-si, Gyeonggi-do
Management Office: (464-895) 133-1, Shinhyeon-ri, Opo-eub, Gwangjoo-si, Gyeonggi-do

Contents

1. Solar Power Generation Practice Experiment Equipment

1-1. Introduction

Devices that can be practice such as solar power equipment KTE-7000ISG practice the actual work in the field. As for equipment features, Stand-alone inverter system equipment practice, Grid-connected inverter system equipment practice, Sequence control practice, Characteristics of Parallel/Series Connection of Solar Cell practice, System equipment practice according to capacity calculated, Device that can be a solar power integrated equipment education as for equipment training utilizing actual field parts

1-2. Solar Power Generation Practice Experiment Equipment

Solar Power Generation Practice Experiment Equipment

Solar power equipment practice device a consists of monitoring the control panel part, facility work and refrain part

2. A detailed description of the equipment component

2-1. Monitoring Control Panel

When configuring to solar power system, configured to enable RS-485 communication and measure to the voltage and current of each line, configured to allow to monitoring practice

(1) AC Ammeter

AC ammeter refers to a type of gauge designed to indicate AC current value. It may measure the current, either by being directly connected to the circuit in series or by using Current Transformer(CT) without being connected to the cable.

(2) AC Voltmeter

AC voltmeter refers to a type of gauge designed to indicate AC voltage value. It may measure the voltage, either by being directly connected to the circuit in parallel or by using Potential Transformer(PT) to convert the 1st voltage to the 2nd voltage.

(3) DC Ammeter

DC ammeter refers to a type of gauge designed to indicate DC current value. While micro current can be measured by connecting the device in series, any huge DC current needs a shunt for precise value. It can also be seen as a resistor which exploits the voltage value converted from current to measure the DC current value.

(4) DC Voltmeter

DC voltmeter refers to a type of gauge designed to indicate DC voltage value. It may measure the voltage by being directly connected to the circuit in parallel.

2-2. Control panel

Using banana jack, actual wiring experiment of configurations of solar and wind power generating system can be done, and it is made to collect the basic information, such as voltage, current when system operating.

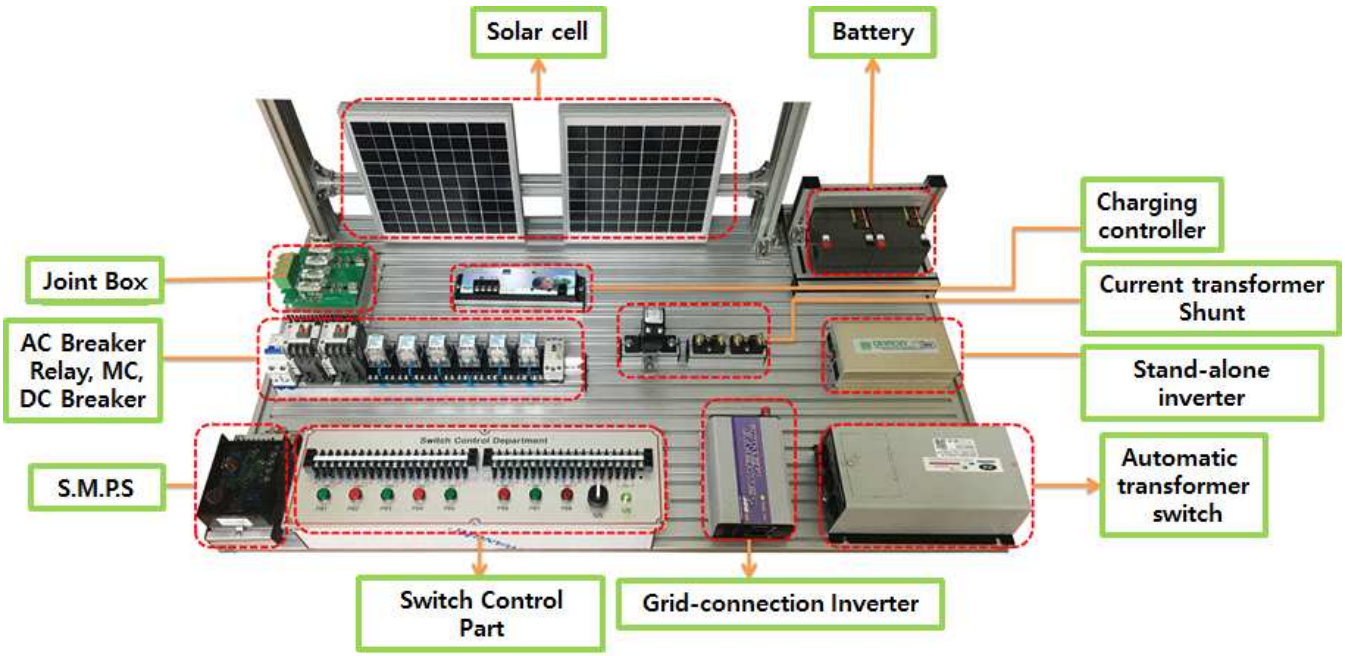

(1) Solar module

* Device that transforms solar energy into electrical energy.
* 10W solar module : 4EA
* Module serial and parallel wiring practice

Mechanical characteristic	
Cell Type	Crystalline silicon
Cell Number	36 Cells
Operating Temp	−40℃ ~ +85℃
Dimensions	285㎜×295㎜×25㎜
Weight	1.1kg

Electrical characteristic	
Maximum Power (Pmax)	10W
Voltage at Pmax (Vmp)	18.8V
Current at Pmax (Imp)	0.58A
Open−Circuit Voltage (Voc)	22.9V
Short−Circuit Current (Isc)	0.62A

(2) Joint box

DC connection board is a device, which is made of a single string connected with multiple solar cell modules with different capacities, to supply direct current voltage generated from such modules to an inverter. Located and used within an inverter, the major component of photovoltaic and wind power generation, it exploits fuses and diodes as rated protection module between the power generated and the inverter, and plays an important role in preventing any possible collisions among the power generated.

(3) Battery

12V batteries : After save to the generated power, Configure the system to use the stored power.

* DC 12V
* 12AH

(4) Charge Controller

Charge controller, whose major function is to make the most of battery capacity while extending the battery life through normal charging procedure, is applicable to both photovoltaic and wind power generator. It also prevents the reverse current flow as well as overcharge. Some of the latest models even have some additional functions such as prevention of over discharge as well as overload, and display function that shows the charging status and current flow.

1) How to Set Battery Voltage

Dip Switch 1	Select Battery Voltage
ON	12V system
OFF	24V system

2) Dip switch settings

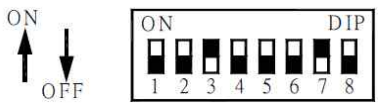

(5) Stand-alone Inverter

Generally, inverter is the device that converts dc to ac, and its method and design varies with its use ranges. For example, it varies depending whether it is motor operation, it is ac voltage for house and electricity is exported with kopec, and in this specification, it is the inverter to use the house-purpose ac voltage. From here, it is also divided into modified sin wavelength and sin wavelength.

* Continuous	500W
* AC Output Voltage	220VAC
* DC Input Voltage	12V
* Output frequency	60Hz ± 3%
* Efficiency	85%

(6) Grid-connected Inverter

It converts 12V DC to 220V AC. It communicates to the commercial electricity system to supply power to the load and supply the left over electricity to the system.

* Input voltage range : DC 10.8~30V
* Rated voltage : AC 190V ±260V
* Rated output capacity : 250W

(7) Automatic Transfer Switch

If generated power is enough, it is operated to supply the power to kopec through grid-connected system, and if power is insufficient, it supplies the power to independent inverter.

* The maximum switching capacity : 20A
* Main power : 190-240 volts
* Main Frequency : 50Hz/60Hz (Available)
* Auxiliary Power : 0-240 volts
* Auxiliary power frequency : Not monitored
* Auxiliary power supply voltage switch : 180 volts
* As the main power switch voltage : 188 volts
* Power switching time : 30 sec
* Size (W*H*D mm) : 130*95*230

(8) Current Transformer

Current transformer refers to a type of transformer designed to be used in an ammeter. It has two windings including the 1st which flows the parallel connection being connected to the circuit in series. The 2nd connects the ammeter between two terminals, and measures the degree of current of 1st winding on the order of ammeter.

(9) Shunt

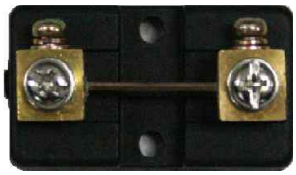

Shunt refers to a type of resistor designed to measure DC current, and expand the measuring range of current. For instance, if the 1st current is 0~100A, a shut enters the 2nd current value converted to 0~5mV in the gauge for the measurement.

(10) Magnetic Contactor

The working principle of a magnetic contactor is same with a relay. In oder words the contact part is operated by absorption force of the electromagnet, usually it is used for big size current open/close of main power or start/stop control of a motor with frequently. A high pressure MC is used for open/close of a high voltage breaker. A magnetic contactor has main contact for open/close of main power, and sub-contact for small power.

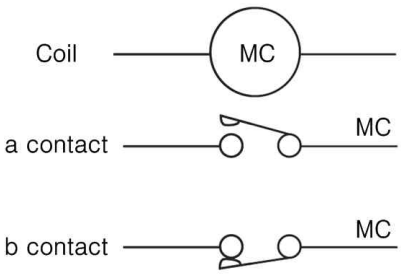

schematic

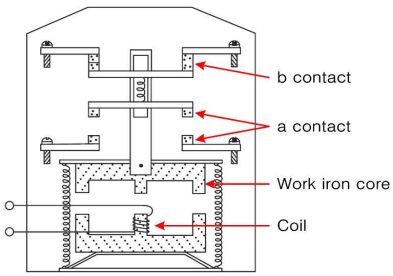

Composition

(11) Push button S/W

Push button S/W

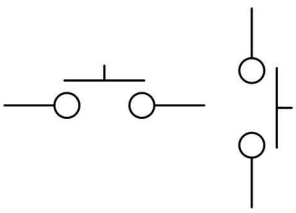

a-contact

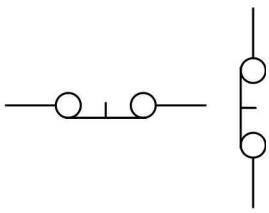

b-contact

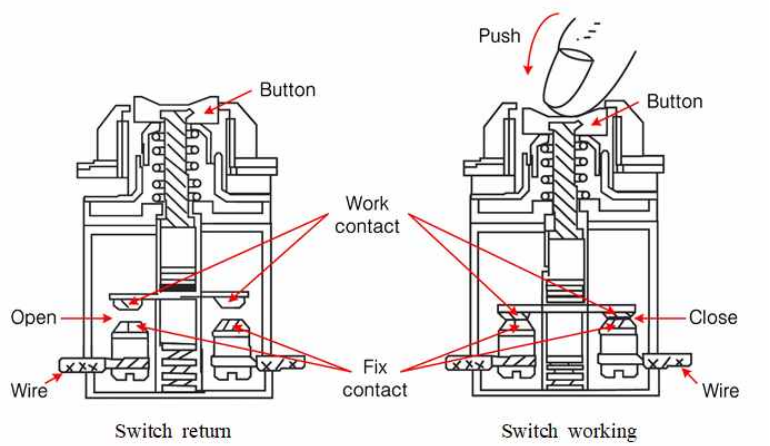

Switch is used as control order device. shows a push button switch. This switch (PB :Push Button switch) works as open/close of electric by pushing force, returns to the proper place by spring force.

(12) Toggle switch

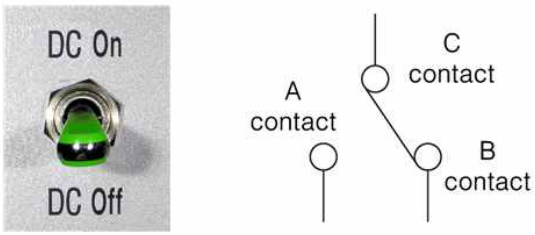

Toggle Switch circuit

Toggle switch is a kind of switch as like push button.
shows a goggle switch (it is called as snap switch.) Switches are distinguished manual operation auto return contact and lock up contact as working status of contact.
Push button switch is a manual operation auto return contact, toggle switch is lock up contact, each has their symbol for clear distinguish.

(13) Select switch

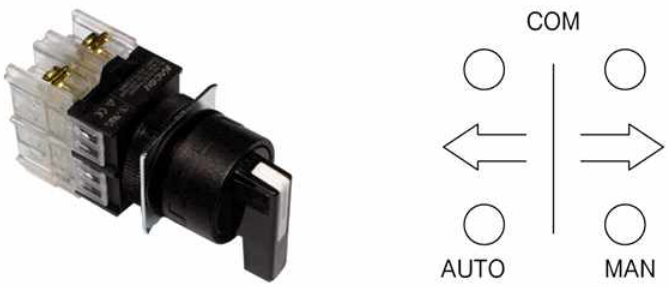

Select S/W Circuit

shows a select switch (it is called as rotary switch.). After operation and though leaving hand the contact and operation section keep working. By switching lever it is selected AUTO or MAN.

(14) Relay

Relay

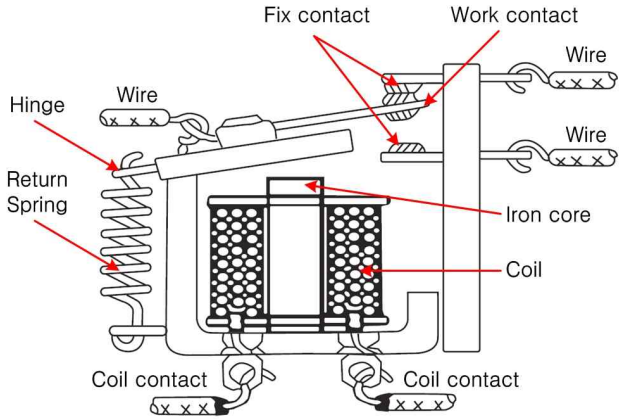

Relay composition

1) In electric circuit a circuit separated by 2 piece, in one side a signal is made and the other side the circuit operates as the signal by open or close. Then the used device is called relay, this is a kind of electric switch.

2) 8 Pin Relay

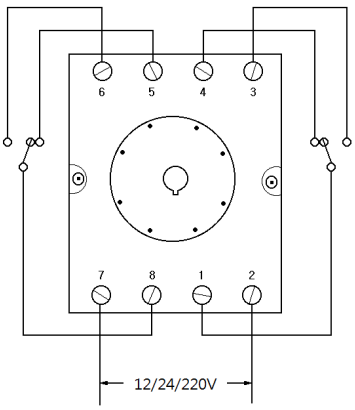

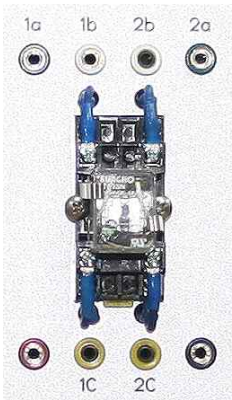

8 Pin Relay

* 8Pin Relay
* (+) socket 1EA
* (-) socket 1EA
* Signal input socket 2EA
* Signal output socket 4EA

An 8-pin relay consists of two sockets of power and six sockets comprising the A and B contacts. Have 8 sockets in total, from socket number 1 to 8.

- 2 socket: Power (-), 7 socket: Power (+)
- 1, 8 socket: Common C point input socket
- 3, 6 socket: A Contact point input socket
- 4, 5 socket: B Contact point output socket

However, if you enter socket 1, then contact 3 A and 4 B will become a switching device for one group. if you enter socket 8, contact 6 A and one B will become a switching device group respectively.

3) 11 Pin Relay

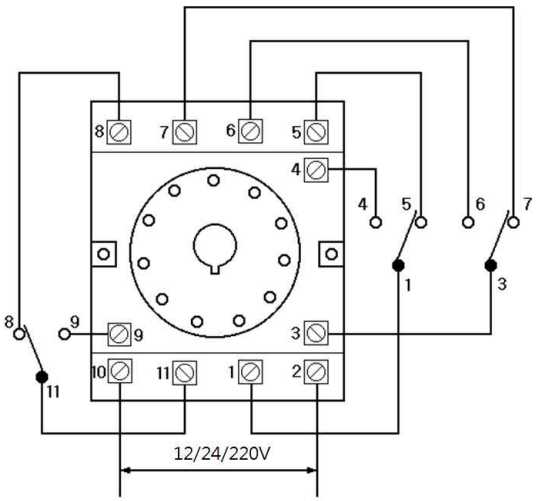

* 11Pin Relay
* (+) socket 1EA
* (-) socket 1EA
* Signal input socket 3EA
* Signal output socket 6EA

11 Pin Relay

An 11-pin relay is a 9 sockets relay that consists of 2 sockets of power and a contact A and B, with a total of 11 sockets from socket number 1 to 11.

- 2 socket: Power (-), 10 socket: Power (+)
- 1, 3, 11 socket: Common C point input socket
- 4, 6, 9 socket: A Contact point output socket
- 5, 7, 8 socket: B Contact point output socket

However, if you enter socket 1, then contact 4 A and 5 B will become a switching device for one group. if you type in socket 3, contact A and one B will become a switching device for the other group.

3. Configuration of Inverter System

Experiment name	1. Practice of Stand-alone Inverter System	Time Required
		8
The Object of Experiment	① To understand the stand-alone inverter system, and to wire an operation circuit. ② To understand the principles of each device of stand-alone inverter system. ③ To understand the features of parallel connection for photovoltaic module.	

Experiment Equipment	Tools and Materials	Spec of Tools	Quantity
· Solar Power Generation Practice Experiment Equipment (KTE-7000ISG)	· Screw driver set · Nipper · Wire Stripper · Hook Meter	· #2× 6× 175㎜ · 150㎜ · 0.5~6㎟ · 300A 600V	1 1 1 group1

Control Circuit

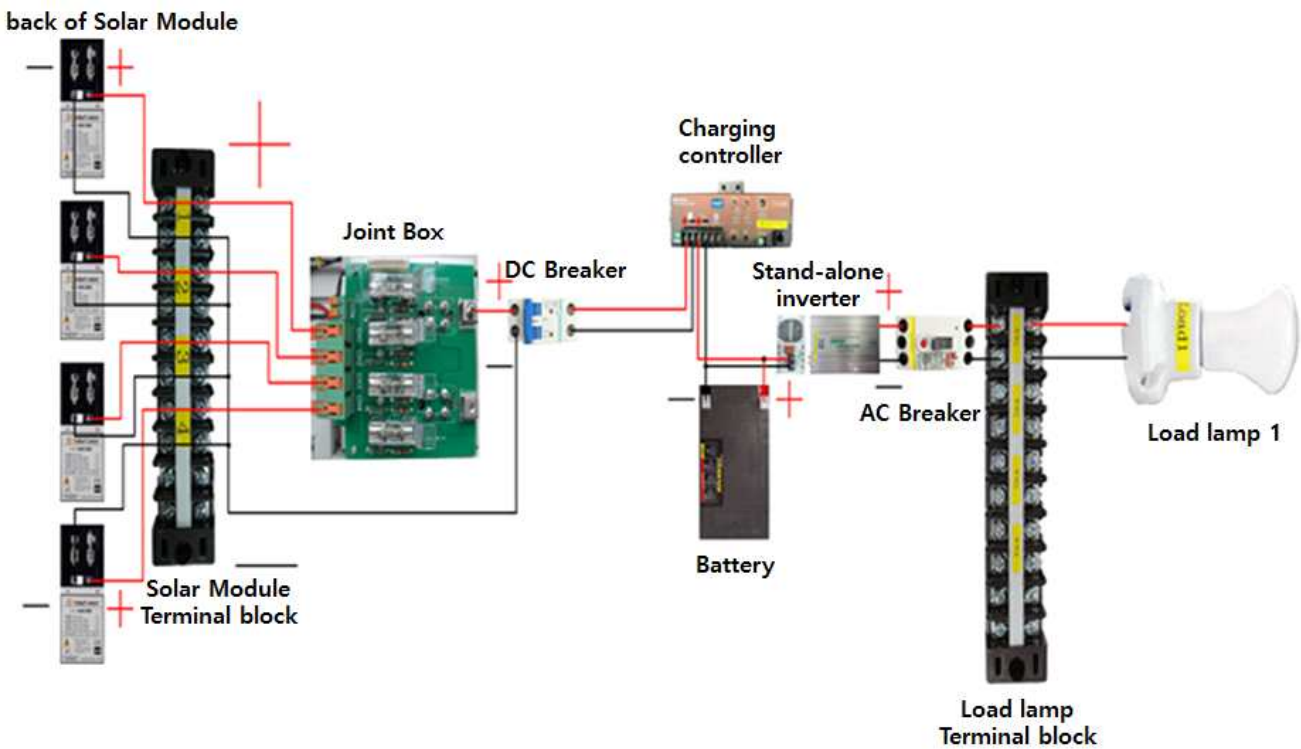

Circuit Components

Solar modules	Battery
Joint box	Stand-alone inverter
DC Breaker	AC Breaker
Charge controller	Load lamp

Actual wiring diagram

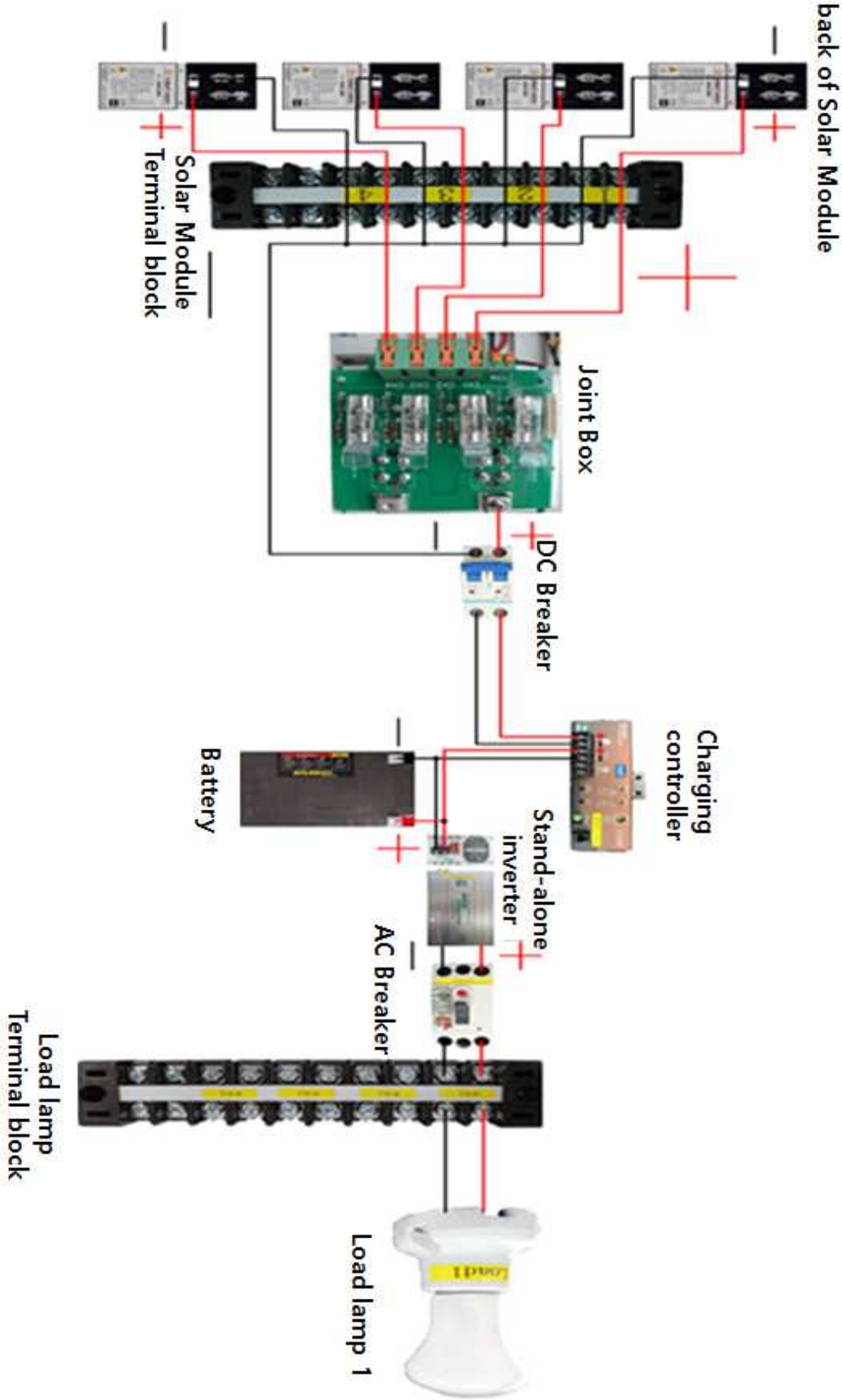

1. Configuration of Circuit Diagram

(1) Connect the positive pole of solar cell module to connection board in parallel.

(2) Connect the output part of connection board and negative pole of solar cell module to input part of DC breaker.

(3) Connect the output part of DC breaker to the input part of charge controller with special attention to positive and negative poles.

(4) Connect the positive and negative terminals of battery of charge controller to the negative and positive terminals of storage battery.

(5) Connect the positive and negative terminals of battery of charge controller to the negative and positive poles of DC input terminal of stand-alone inverter.

(6) Connect the AC output part of stand-alone inverter to the input part of AC breaker.

(7) Connect the output part of AC breaker to the load lamp.

(8) Set the DIP switch of charge controller in line with the battery voltage.

(9) Put the switches of DC breaker and AC breaker on ON, and the lamp shall be turned on.

*Note

- Identify if the switches of DC breaker and AC breaker are put on OFF before circuit wiring.
- Make sure not to cause any short-circuit to solar cell and battery.

2. Characteristics of Parallel Connection of Solar Cell

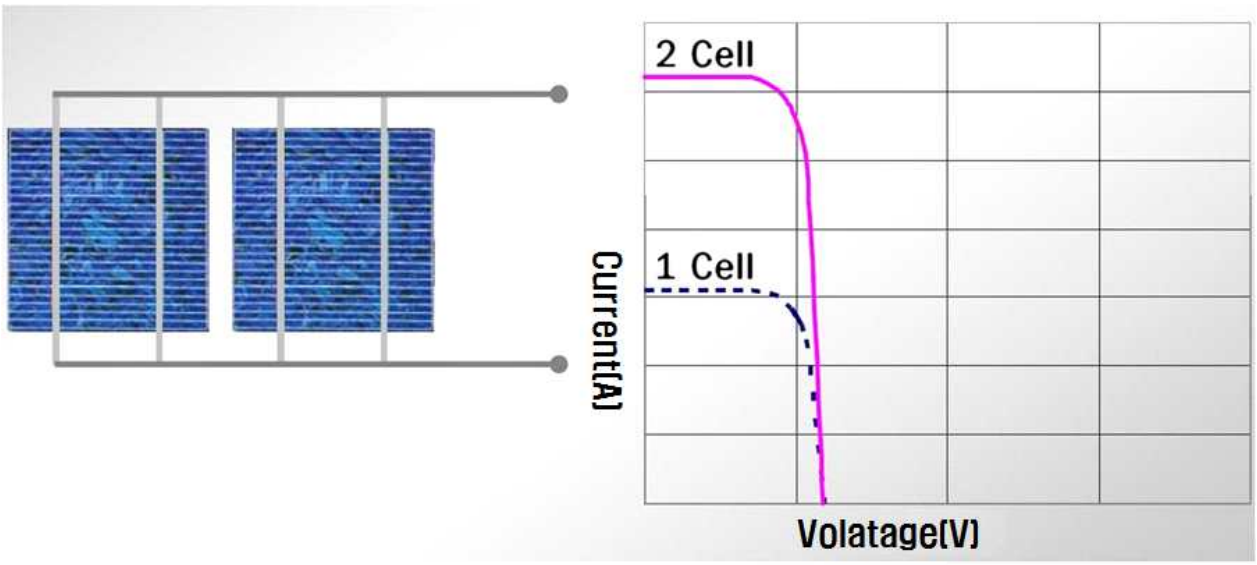

(1) Parallel connection is easy for separate control as it has multiple channels in a circuit.

(2) Parallel connection never changes the voltage.

(3) Parallel connection enables partial power supply although a cable of a solar cell is disconnected.

(4) Parallel connection renders uniform voltage although the current increases by the number of solar cells connected in parallel.

(5) Parallel connection has higher construction cost than series connection due to thicker and more cables.

3. Characteristics of Series Connection of Solar Cell

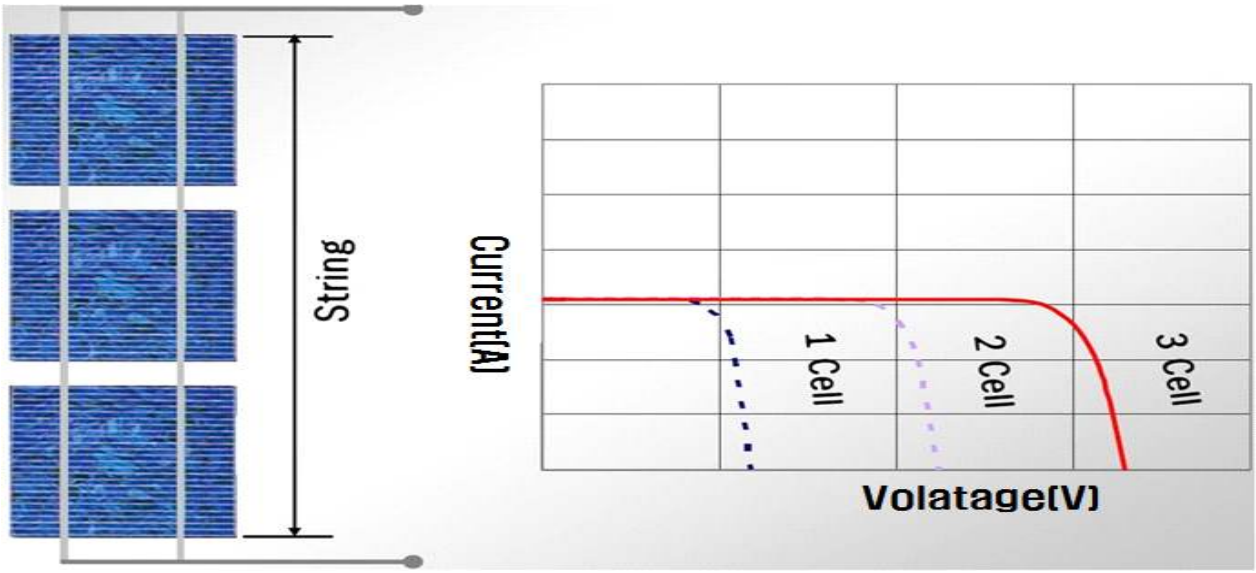

(1) Series connection is easy for single control as it has only one channel in a circuit.

(2) Series connection renders higher voltage.

(3) Series connection disables the entire power supply when a cable of a solar cell is disconnected.

(4) Series connection renders uniform current although the voltage ncreases by the number of solar cells connected in series.

4. Joint box

DC connection board is a device, which is made of a single string connected with multiple solar cell modules with different capacities, to supply direct current voltage generated from such modules to an inverter. Located and used within an inverter, the major component of photovoltaic and wind power generation, it exploits fuses and diodes as rated protection module between the power generated and the inverter, and plays an important role in preventing any possible collisions among the power generated.

5. Battery

Battery converts the chemical energy in the chemical substance inside of it to electric energy by oxidation-reduction reaction, and if all electric energies are consumed, voltage will be getting lower due to discharge. Eventually, it cannot transport the electric charge, and at this time. It is divided into 1st battery and 2nd battery depending on charging possibility. 1st battery is disposable, and 2nd battery can be recycled throughout charging.

6. Charge Controller

Charge controller, whose major function is to make the most of battery capacity while extending the battery life through normal charging procedure, is applicable to both photovoltaic and wind power generator. It also prevents the reverse current flow as well as overcharge. Some of the latest models even have some additional functions such as prevention of over discharge as well as overload, and display function that shows the charging status and current flow.

(1) How to Set Battery Voltage

Dip Switch 1	Select Battery Voltage
ON	12V system
OFF	24V system

(2) Dip switch settings

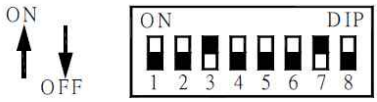

7. Inverter

Generally, inverter is the device that converts dc to ac, and its method and design varies with its use ranges. For example, it varies depending whether it is motor operation, it is ac voltage for house and electricity is exported with kopec, and in this specification, it is the inverter to use the house-purpose ac voltage. From here, it is also divided into modified sin wavelength and sin wavelength.

Solar Power Generation Practice Experiment Equipment (KTE-7000ISG)

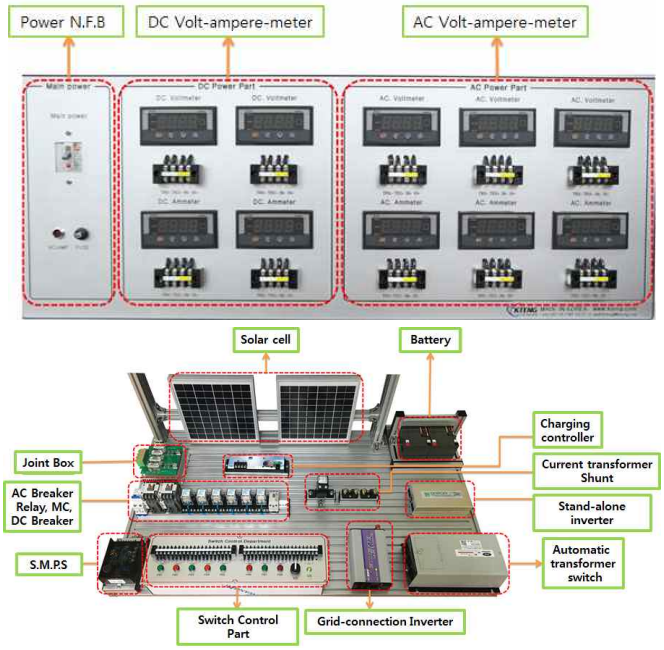

Control Panel and Parts Layout

· Requirement

1. Prepare and check the test devices, tools and materials.
2. Purpose and effect of battery connection can be explained.
3. To understand the functions of each component
4. To explain DC and AC voltage lines
5. To understand and explain series and parallel connections
6. To understand and set the DIP switch of charge controller

Valuation Basis	Evaluation Item		Allot	Obtain	Remarks			
	Item point (70)	Configuration Circuit and operation	20					
		Real wiring circuit configuration	20					
		Configuration state	10					
		Understanding and description for circuit	20					
	Work point (10)	Work attitude and safe	5					
		Usage and arrangement of tool	5					
	Time point (20)	Subtract ( ) point in every ( ) minute excess			Item	Work	Time	Total

Experiment name	2. Practice of Stand-alone Inverter System using Automatic Transfer Switch	Time Required
		8

The Object of Experiment	① To wire the operation circuit using ATS ② To understand the principles of ATS ③ To understand the features of parallel connection for photovoltaic module

Experiment Equipment	Tools and Materials	Spec of Tools	Quantity
· Solar Power Generation Practice Experiment Equipment (KTE-7000ISG)	· Screw driver set · Nipper · Wire Stripper · Hook Meter	· #2× 6× 175㎜ · 150㎜ · 0.5~6㎟ · 300A 600V	1 1 1 group1

Control Circuit

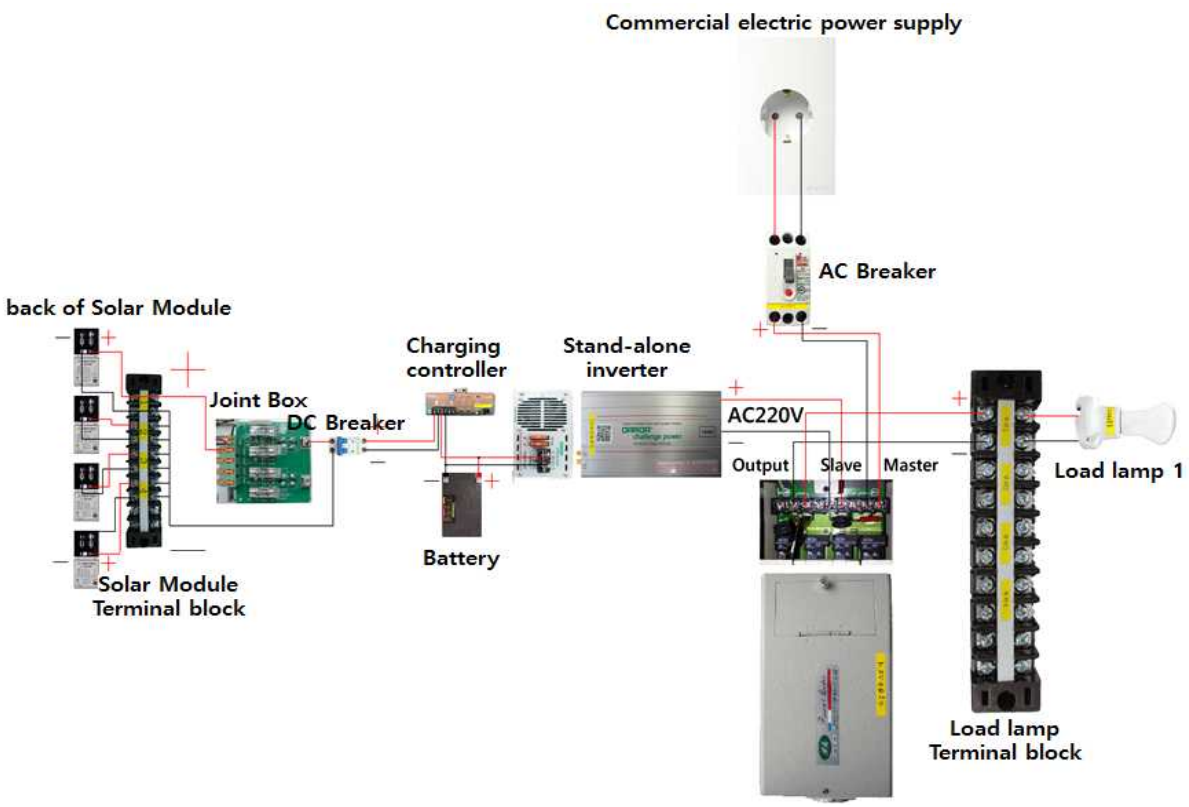

Circuit Components

Solar modules	Battery
Joint box	Stand-alone inverter
DC Breaker	AC Breaker
Charge controller	Load lamp
Automatic Transfer Switch(A.T.S)	

Actual wiring diagram

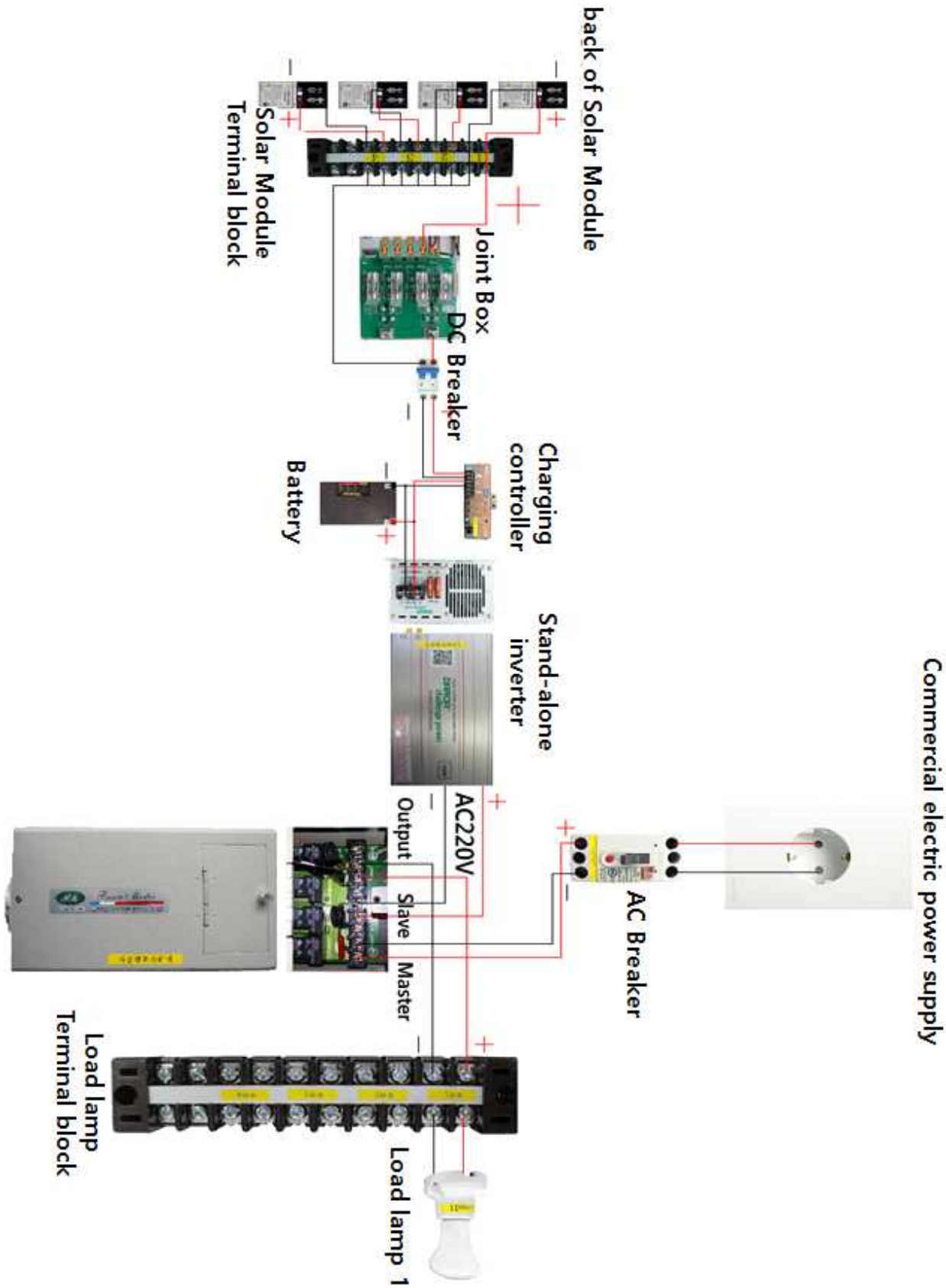

1. Configuration of Circuit Diagram

(1) Connect the solar cell module to connection board in series.

(2) Connect the output part of connection board and negative pole of solar cell module to input part of DC breaker.

(3) Connect the output part of DC breaker to the input part of charge controller with special attention to positive and negative poles.

(4) Connect the positive and negative terminals of battery of charge controller to the negative and positive terminals of storage battery.

(5) Connect the positive and negative terminals of battery of charge controller to the negative and positive poles of DC input terminal of stand-alone inverter.

(6) Connect the AC output part of stand-alone-inverter to input part of ATS slave.

(7) Connect the output part of AC breaker to the input terminal of ATS master.

(8) Connect the ATS output to the load lamp.

(8) Set the DIP switch of charge controller in line with the battery voltage.

(9) Put the switches of DC breaker and AC breaker on ON, and the lamp shall be turned on.

(10) Put the switch of AC breaker on OFF, and the ATS may judge it as power failure, subsequently letting the lamp flicker, being converted to the input power line of inverter.

*Note

- Identify if the switches of DC breaker and AC breaker are put on OFF before circuit wiring.
- Make sure not to cause any short-circuit to solar cell and battery.

2. ATS(Automatic transfer switch)

Automatic transfer switch secures the double or triple power, so when main power blackout or voltage is dropped less than standard value, it is converted to backup power automatically, so it is the device that makes customer receive constant power.

Due to blackout of main power input, auxiliary power input is automatically converted, so it always supplies the uninterruptible power.

Maintain the power supply by auxiliary power, and then if main power input is supplied again, it is converted automatically to main power.

(1) Scope of various using purpose

Emergency generator, substitute for ups, place where power failure frequently, grid-connected solar street lamp, emergency power converter , and other place where stable electricity supply is required.

(2) Import power operation status

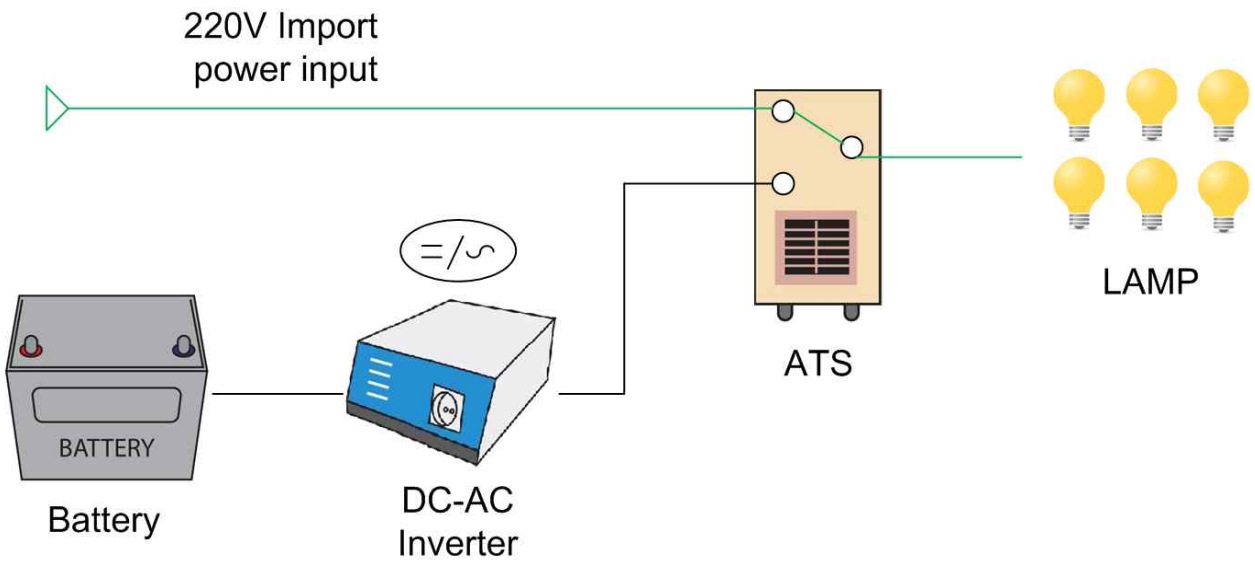

(3) Import power is interrupted status

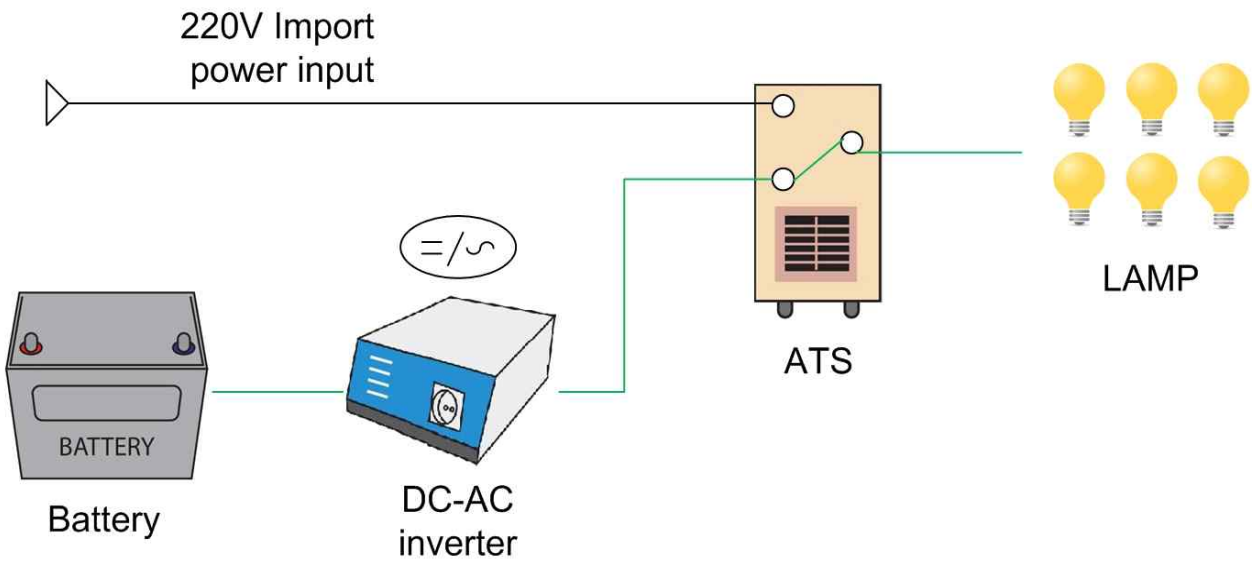

Solar Power Generation Practice Experiment Equipment (KTE-7000ISG)

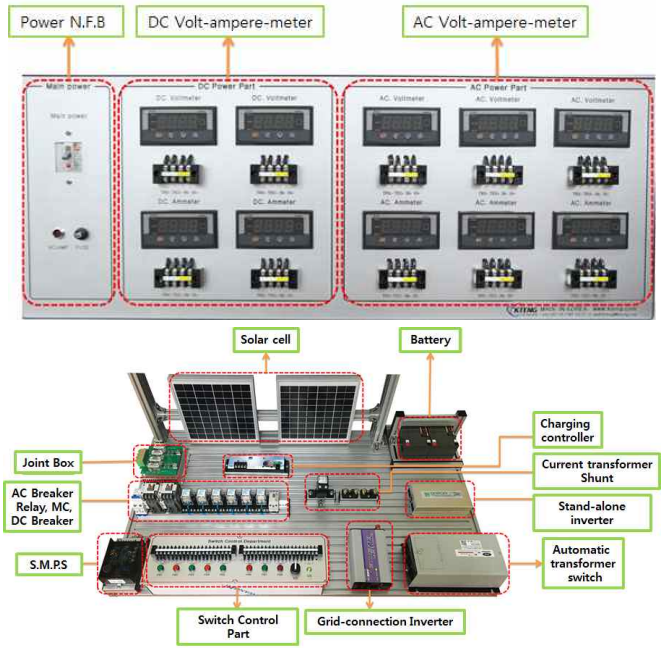

Control Panel and Parts Layout

· Requirement

1. Prepare and check the test devices, tools and materials.
2. Purpose and effect of battery connection can be explained.
3. To understand the functions of each component
4. To explain DC and AC voltage lines
5. To understand and explain series and parallel connections
6. To understand and set the DIP switch of charge controller

Valuation Basis	Evaluation Item		Allot	Obtain	Remarks			
	Item point (70)	Configuration Circuit and operation	20					
		Real wiring circuit configuration	20					
		Configuration state	10					
		Understanding and description for circuit	20					
	Work point (10)	Work attitude and safe	5					
		Usage and arrangement of tool	5					
	Time point (20)	Subtract ( ) point in every ( ) minute excess			Item	Work	Time	Total

Experiment name	3. Practice of Connecting Voltage / Current Measurement Device of Stand-alone Inverter System	Time Required
		8

The Object of Experiment	
	① To measure the voltage and current of stand-alone inverter system ② To distinguish DC and AC lines of stand-alone inverter ③ To install DC voltmeter and ammeter as well as AC voltmeter and ammeter

Experiment Equipment	Tools and Materials	Spec of Tools	Quantity
· Solar Power Generation Practice Experiment Equipment (KTE-7000ISG)	· Screw driver set · Nipper · Wire Stripper · Hook Meter	· #2× 6× 175㎜ · 150㎜ · 0.5~6㎟ · 300A 600V	1 1 1 group1

Control Circuit

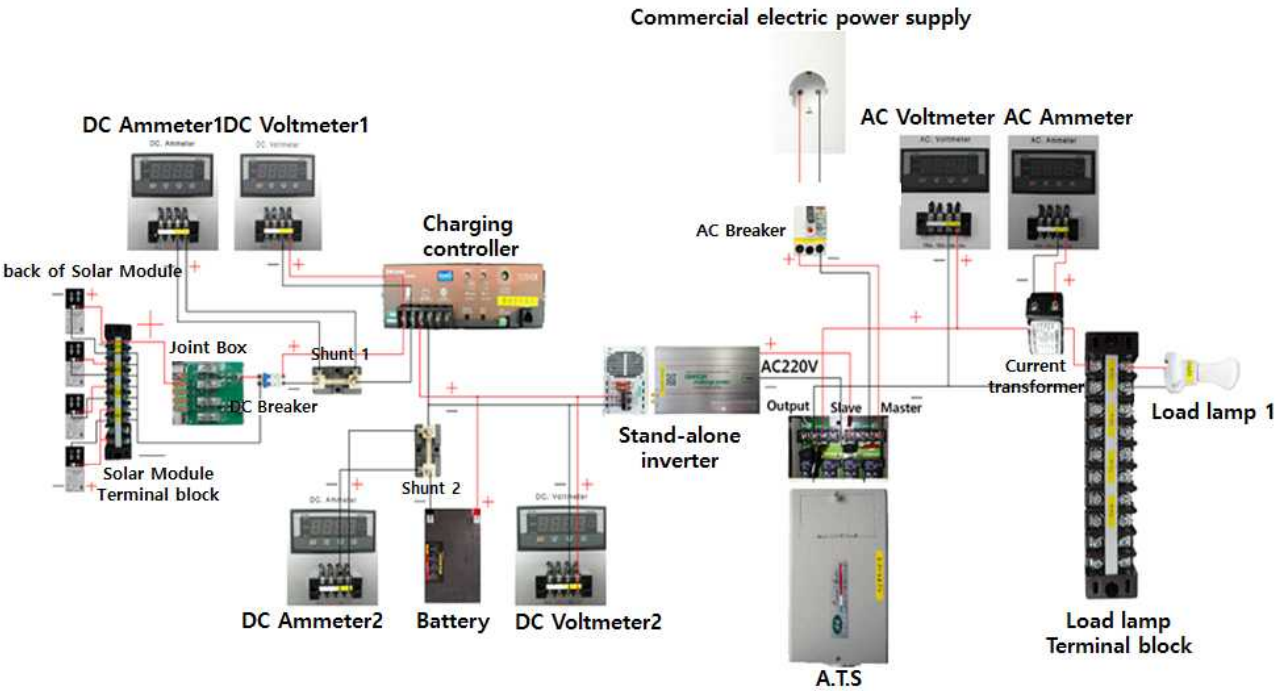

Circuit Components

Solar modules	Battery
Joint box	Stand-alone inverter
DC Breaker	AC Breaker
Charge controller	Load lamp
Automatic Transfer Switch(A.T.S)	Converter(C.T)
Shunt	AC voltmeter, AC ammeter
DC voltmeter, DC ammeter	

Actual wiring diagram

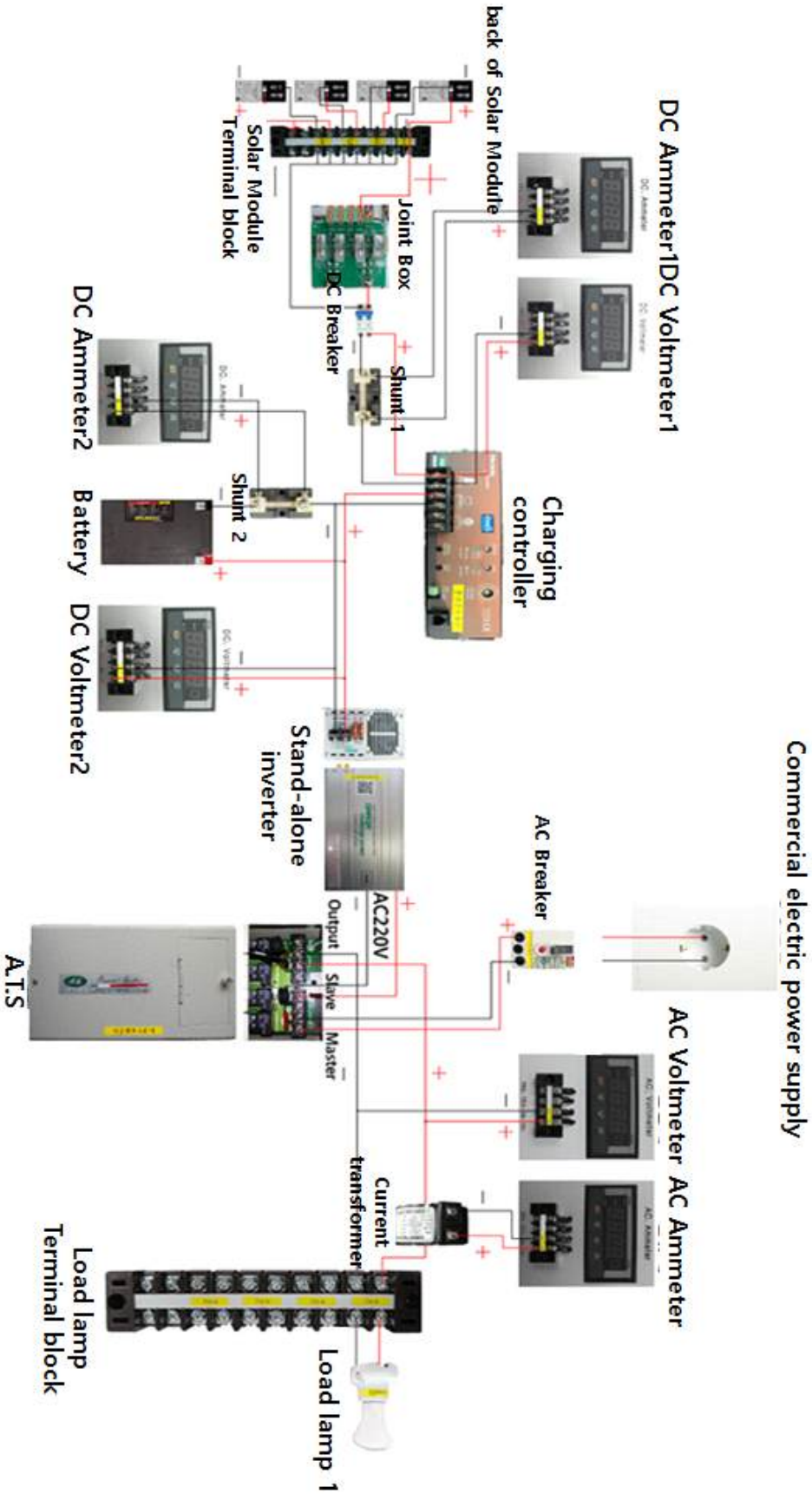

1. Configuration of Circuit Diagram

(1) Connect the solar cell module to connection board in series.

(2) Connect the output part of connection board and negative pole of solar cell module to input part of DC breaker.

(3) Connect positive output of DC breaker to positive input of charge controller and negative output of DC breaker to negative input of charge controller.

(4) Connect positive terminal of battery of charge controller to positive pole of storage battery and negative terminal of battery of charge controller to shunt and negative pole of storage battery.

(5) Connect the positive and negative terminals of battery of charge controller to the negative and positive poles of DC input terminal of stand-alone inverter.

(6) Connect the AC output part of stand-alone-inverter to input part of ATS slave.

(7) Connect the output part of AC breaker to the input terminal of ATS master.

(8) Connect the ATS output to the load lamp through current transformer.

(9) Connect the output terminals of shunt 1 and 2 to each DC ammeter.

(10) Connect the output terminal of current transformer to AC ammeter.

(11) Connect the input parts of DC and AC volt meters in line with circuit diagram.

(12) Set the DIP switch of charge controller in line with the battery voltage.

(13) Put the switches of DC breaker and AC breaker on ON, and the lamp shall be turned on.

(14) Put the switch of AC breaker on OFF, and the ATS may judge it as power failure, subsequently letting the lamp flicker, being converted to the input power line of inverter.

*Note

- Identify if the switches of DC breaker and AC breaker are put on OFF before circuit wiring.
- Make sure not to cause any short-circuit to solar cell and battery.

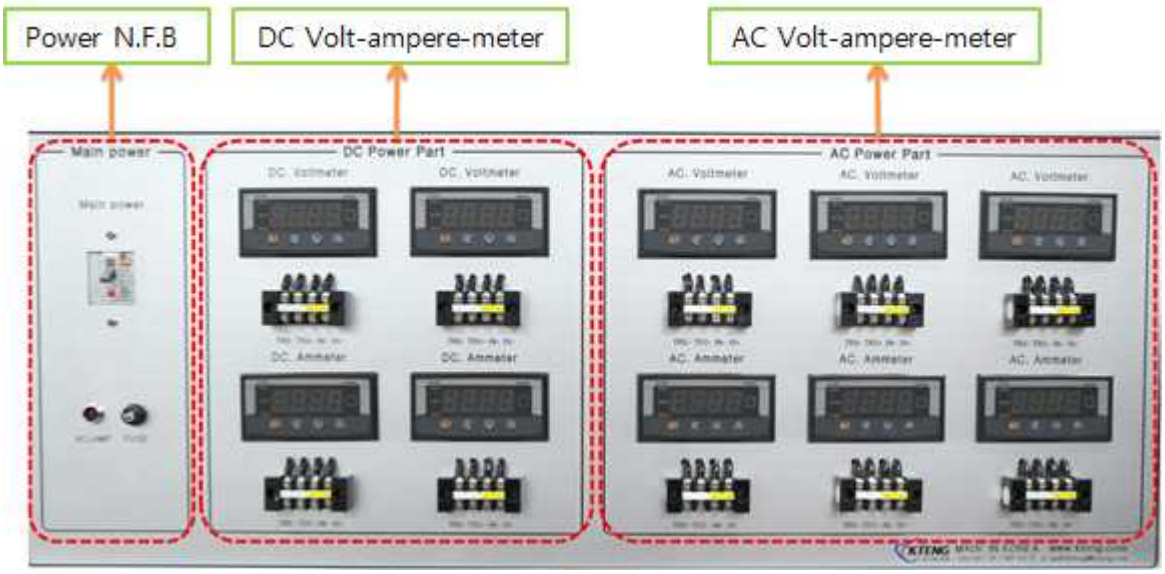

It is configured to measure the voltage current at each line when constructing a solar power generation system.

2. Current Transformer

Current transformer refers to a type of transformer designed to be used in an ammeter. It has two windings including the 1st which flows the parallel connection being connected to the circuit in series. The 2nd connects the ammeter between two terminals, and measures the degree of current of 1st winding on the order of ammeter.

3. Shunt

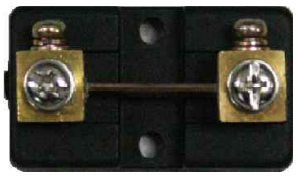

Shunt refers to a type of resistor designed to measure DC current, and expand the measuring range of current. For instance, if the 1st current is 0~100A, a shut enters the 2nd current value converted to 0~5mV in the gauge for the measurement.

4. AC Ammeter

AC ammeter refers to a type of gauge designed to indicate AC current value. It may measure the current, either by being directly connected to the circuit in series or by using Current Transformer(CT) without being connected to the cable.

5. AC Voltmeter

AC voltmeter refers to a type of gauge designed to indicate AC voltage value. It may measure the voltage, either by being directly connected to the circuit in parallel or by using Potential Transformer(PT) to convert the 1st voltage to the 2nd voltage.

6. DC Ammeter

DC ammeter refers to a type of gauge designed to indicate DC current value. While micro current can be measured by connecting the device in series, any huge DC current needs a shunt for precise value. It can also be seen as a resistor which exploits the voltage value converted from current to measure the DC current value.

7. DC Voltmeter

DC voltmeter refers to a type of gauge designed to indicate DC voltage value. It may measure the voltage by being directly connected to the circuit in parallel.

Solar Power Generation Practice Experiment Equipment (KTE-7000ISG)

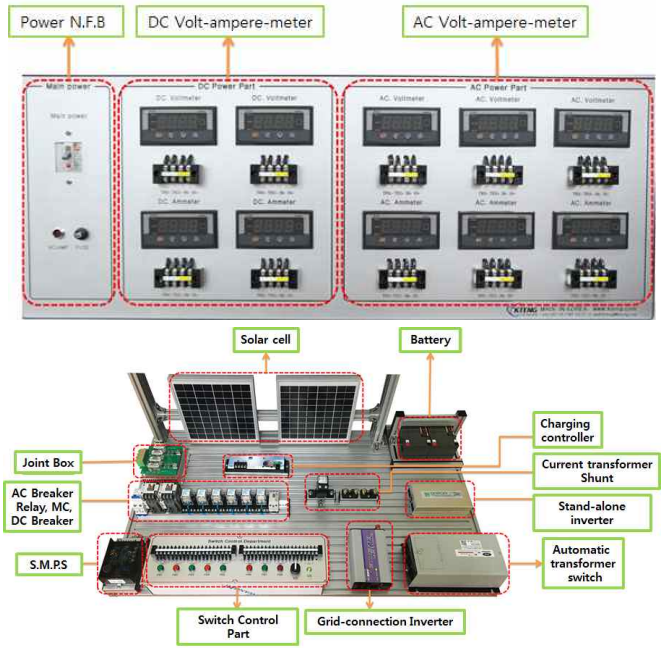

Control Panel and Parts Layout

· Requirement

1. Prepare and check the test devices, tools and materials.
2. Purpose and effect of battery connection can be explained.
3. To understand the functions of each component
4. To understand and explain the features of current transformer
5. To understand and explain the features of shunt
6. To understand the features of and to use DC voltmeter and ammeter or AC voltmeter and ammeter

Valuation Basis	Evaluation Item		Allot	Obtain	Remarks			
	Item point (70)	Configuration Circuit and operation	20					
		Real wiring circuit configuration	20					
		Configuration state	10					
		Understanding and description for circuit	20					
	Work point (10)	Work attitude and safe	5					
		Usage and arrangement of tool	5					
	Time point (20)	Subtract ( ) point in every ( ) minute excess			Item	Work	Time	Total

Experiment name	4. Practice of Load Control of Stand-alone Inverter System	Time Required
		8

The Object of Experiment	
	① To control the load lamp of stand-alone inverter system ② To understand the function of and to install relay ③ To execute the real wiring after viewing the given circuit diagram

Experiment Equipment	Tools and Materials	Spec of Tools	Quantity
· Solar Power Generation Practice Experiment Equipment (KTE-7000ISG)	· Screw driver set	· #2× 6× 175㎜	1
	· Nipper	· 150㎜	1
	· Wire Stripper	· 0.5~6㎟	1
	· Hook Meter	· 300A 600V	group1

Control Circuit

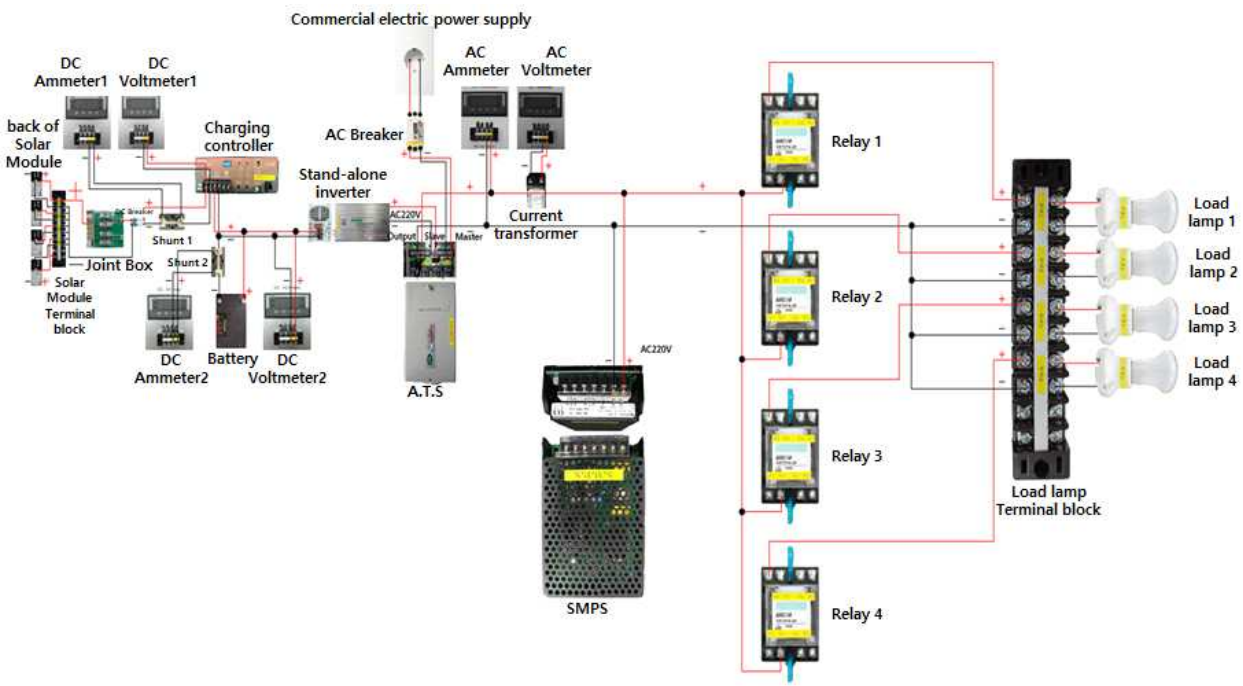

Circuit Components

Solar modules	Battery
Joint box	Stand-alone inverter
DC Breaker	AC Breaker
Charge controller	Load lamp
Automatic Transfer Switch(A.T.S)	Converter(C.T)
Shunt	AC voltmeter, AC ammeter
DC voltmeter, DC ammeter	Relay

Actual wiring diagram

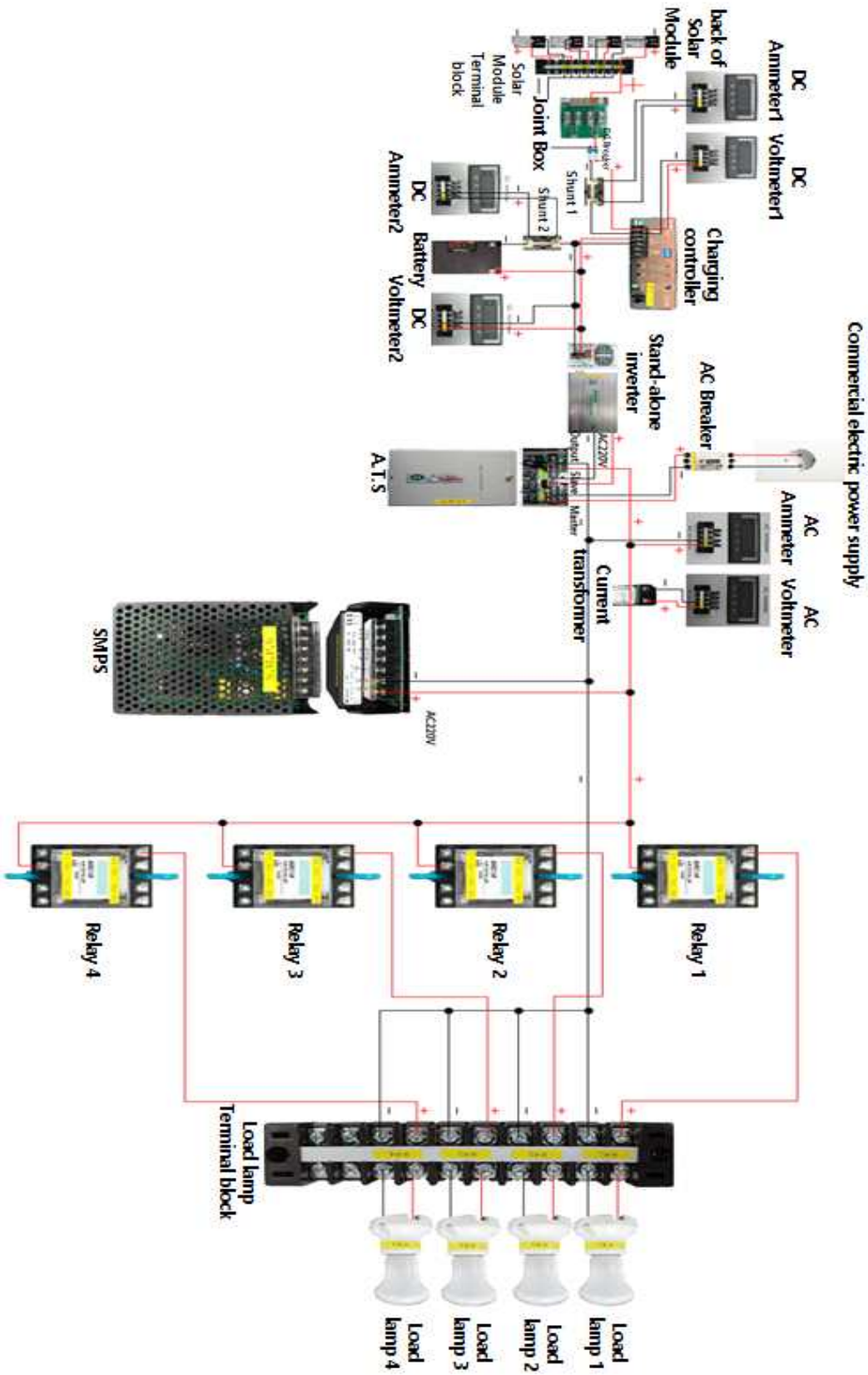

1. Control Circuit Diagram of Load Lamp

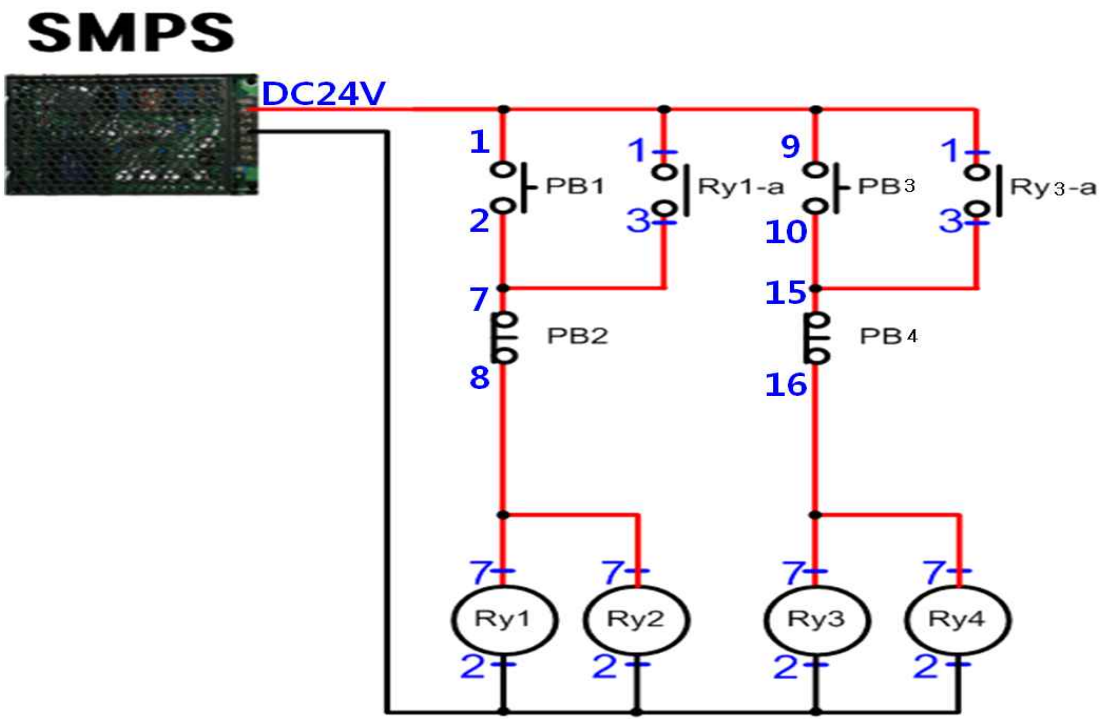

Control Circuit

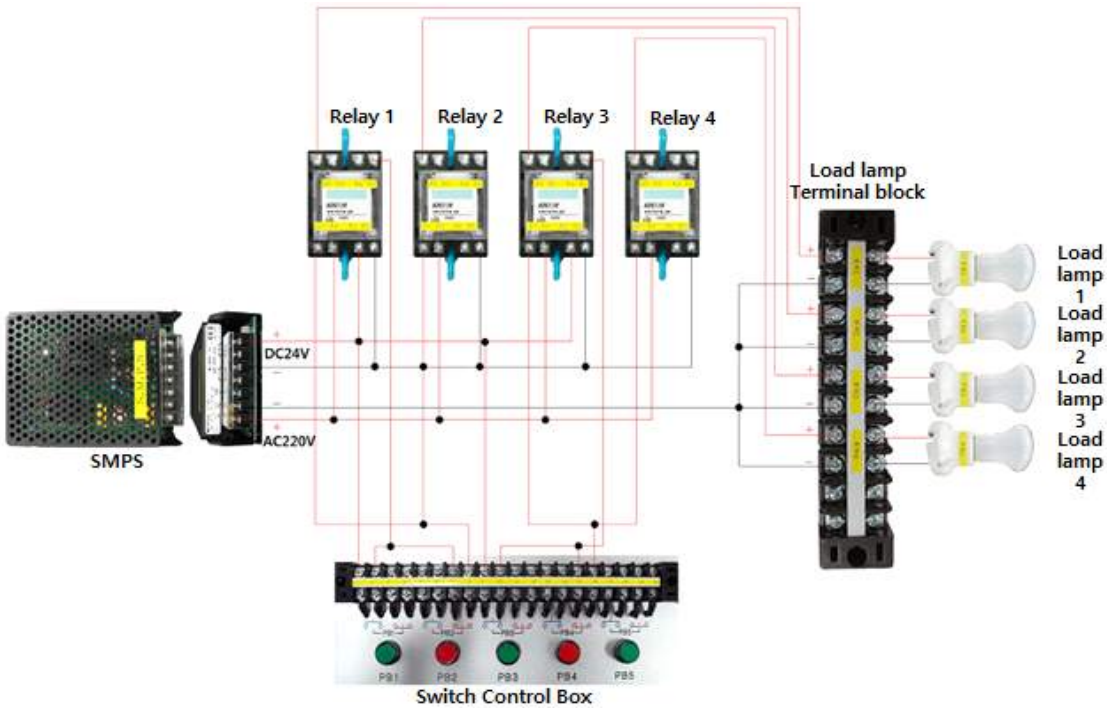

Actual wiring diagram

2. Configuration of Circuit Diagram

(1) Connect the solar cell module to connection board in series.

(2) Connect the output part of connection board and negative pole of solar cell module to input part of DC breaker.

(3) Connect positive output of DC breaker to positive input of charge controller and negative output of DC breaker to negative input of charge controller.

(4) Connect positive terminal of battery of charge controller to positive pole of storage battery and negative terminal of battery of charge controller to shunt and negative pole of storage battery.

(5) Connect the positive and negative terminals of battery of charge controller to the negative and positive poles of DC input terminal of stand-alone inverter.

(6) Connect the AC output part of stand-alone-inverter to input part of ATS slave.

(7) Connect the output part of AC breaker to the input terminal of ATS master.

(8) Connect the ATS output to the load lamp through current transformer, and wire the control circuit in line with control circuit 1.

(9) Connect the output terminals of shunt 1 and 2 to each DC ammeter.

(10) Connect the output terminal of current transformer to AC ammeter.

(11) Connect the input parts of DC and AC volt meters in line with circuit diagram.

(12) Set the DIP switch of charge controller in line with the battery voltage.

(13) Put the switches of DC breaker and AC breaker on ON, and subsequently put the switch of inverter on ON. Then, press PB1 and PB3, and the lamp will be turned on.

(14) Put the switch of AC breaker on OFF, and the ATS may judge it as power failure, subsequently letting the lamp flicker, being converted to the input power line of inverter.

*Note

- Identify if the switches of DC breaker and AC breaker are put on OFF before circuit wiring.
- Make sure not to cause any short-circuit to solar cell and battery.

2. Push button S/W

Push button S/W

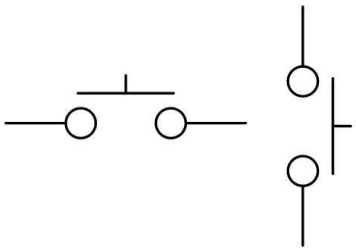

a-contact

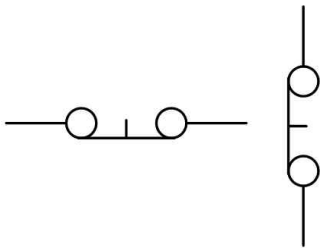

b-contact

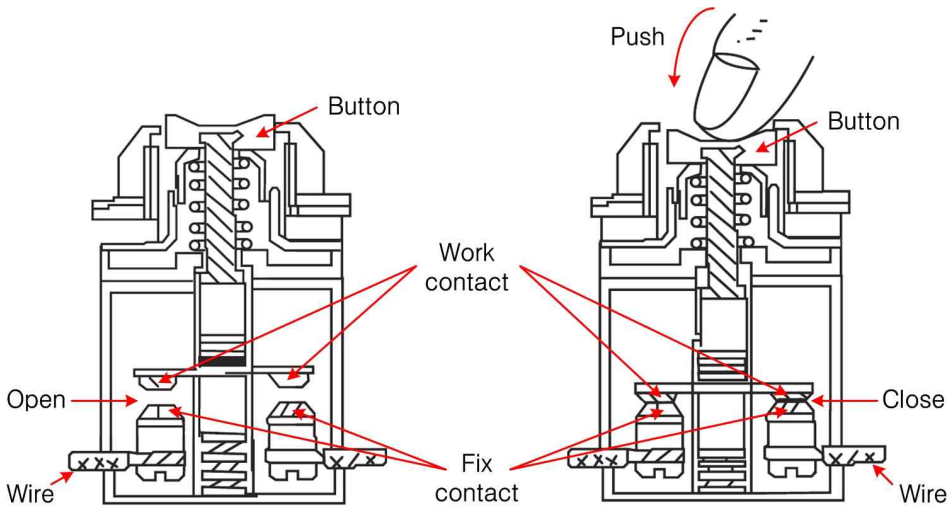

Switch return

Switch working

(1) Switch is used as control order device. shows a push button switch. This switch (PB :Push Button switch) works as open/close of electric by pushing force, returns to the proper place by spring force.

3. Toggle switch

Toggle Switch

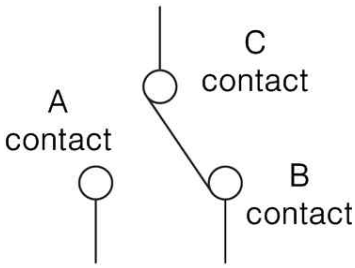

circuit

(1) Toggle switch is a kind of switch as like push button.
shows a goggle switch (it is called as snap switch.) Switches are distinguished manual operation auto return contact and lock up contact as working status of contact.
Push button switch is a manual operation auto return contact, toggle switch is lock up contact, each has their symbol for clear distinguish.

4. Select switch

Select S/W

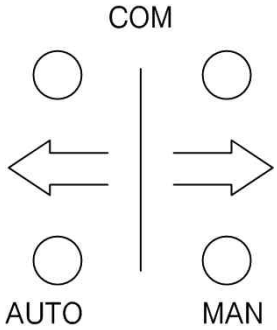

Circuit

(1) shows a select switch (it is called as rotary switch.). After operation and though leaving hand the contact and operation section keep working. By switching lever it is selected AUTO or MAN.

5. Relay

Relay

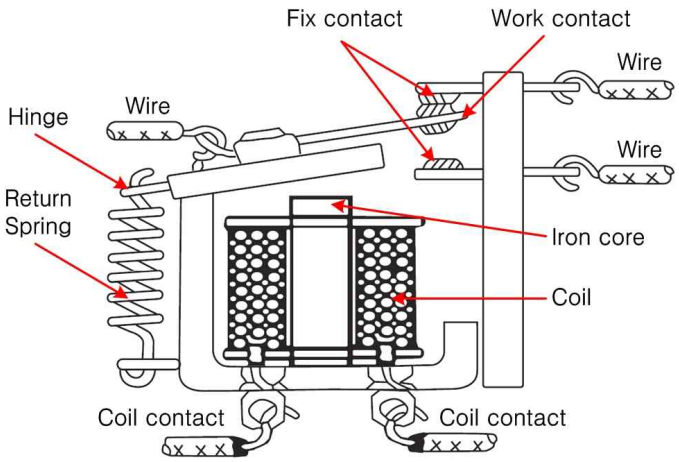

Relay composition

(1) In electric circuit a circuit separated by 2 piece, in one side a signal is made and the other side the circuit operates as the signal by open or close. Then the used device is called relay, this is a kind of electric switch.

(2) 8 Pin Relay

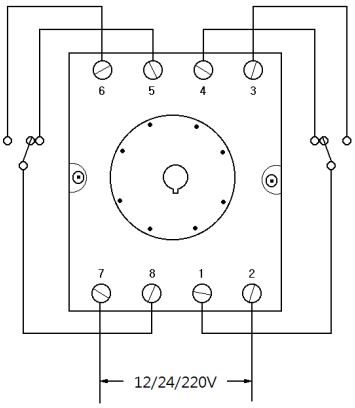

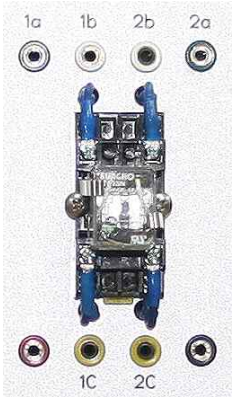

* 8Pin Relay
* (+) socket 1EA
* (-) socket 1EA
* Signal input socket 2EA
* Signal output socket 4EA

8 Pin Relay

An 8-pin relay consists of two sockets of power and six sockets comprising the A and B contacts. Have 8 sockets in total, from socket number 1 to 8.

- 2 socket: Power (-), 7 socket: Power (+)
- 1, 8 socket: Common C point input socket
- 3, 6 socket: A Contact point input socket
- 4, 5 socket: B Contact point output socket

However, if you enter socket 1, then contact 3 A and 4 B will become a switching device for one group. if you enter socket 8, contact 6 A and one B will become a switching device group respectively.

(3) 11 Pin Relay

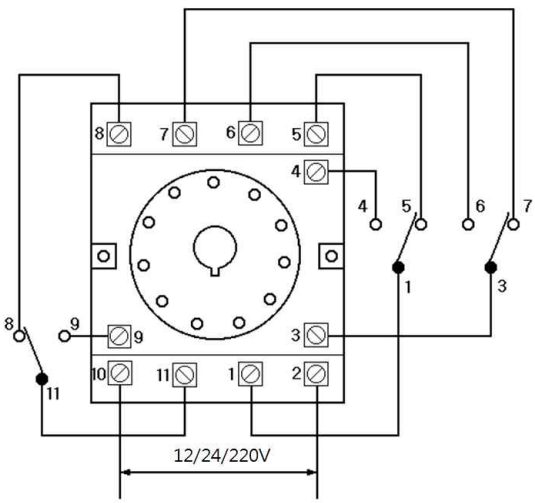

* 11Pin Relay
* (+) socket 1EA
* (-) socket 1EA
* Signal input socket 3EA
* Signal output socket 6EA

11 Pin Relay

An 11-pin relay is a 9 sockets relay that consists of 2 sockets of power and a contact A and B, with a total of 11 sockets from socket number 1 to 11.

- 2 socket: Power (-), 10 socket: Power (+)
- 1, 3, 11 socket: Common C point input socket
- 4, 6, 9 socket: A Contact point output socket
- 5, 7, 8 socket: B Contact point output socket

However, if you enter socket 1, then contact 4 A and 5 B will become a switching device for one group. if you type in socket 3, contact A and one B will become a switching device for the other group.

Solar Power Generation Practice Experiment Equipment (KTE-7000ISG)

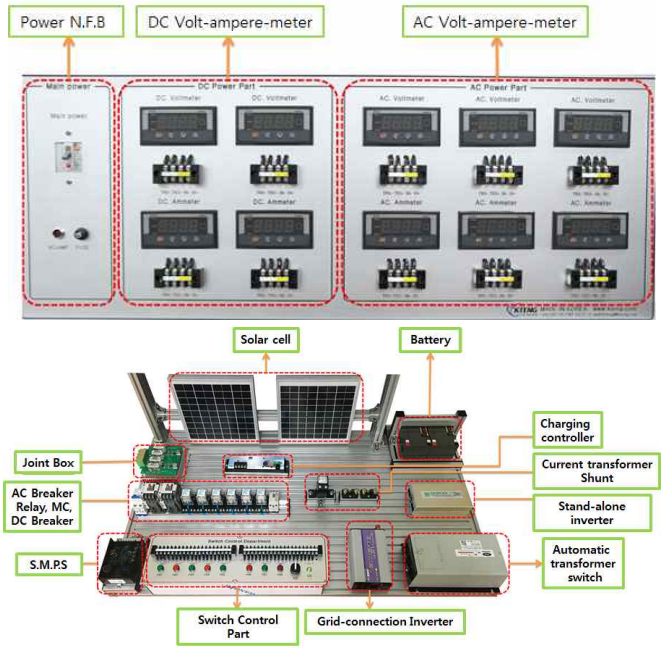

Control Panel and Parts Layout

· Requirement

1. Prepare and check the test devices, tools and materials.
2. Purpose and effect of battery connection can be explained.
3. To understand the functions of each component
4. To understand and explain the features of relay
5. To understand and explain the operations of circuit

Valuation Basis	Evaluation Item		Allot	Obtain	Remarks			
	Item point (70)	Configuration Circuit and operation	20					
		Real wiring circuit configuration	20					
		Configuration state	10					
		Understanding and description for circuit	20					
	Work point (10)	Work attitude and safe	5					
		Usage and arrangement of tool	5					
	Time point (20)	Subtract ( ) point in every ( ) minute excess			Item	Work	Time	Total

Experiment name	5. Practice of Power and Load Control of Stand-alone Inverter System	Time Required
		8

The Object of Experiment	
	① To control power and load line of stand-alone inverter system ② To understand the function of and install relay MC ③ To execute the real wiring after viewing the given circuit diagram

Experiment Equipment	Tools and Materials	Spec of Tools	Quantity
· Solar Power Generation Practice Experiment Equipment (KTE-7000ISG)	· Screw driver set · Nipper · Wire Stripper · Hook Meter	· #2× 6× 175㎜ · 150㎜ · 0.5~6㎟ · 300A 600V	1 1 1 group1

Control Circuit

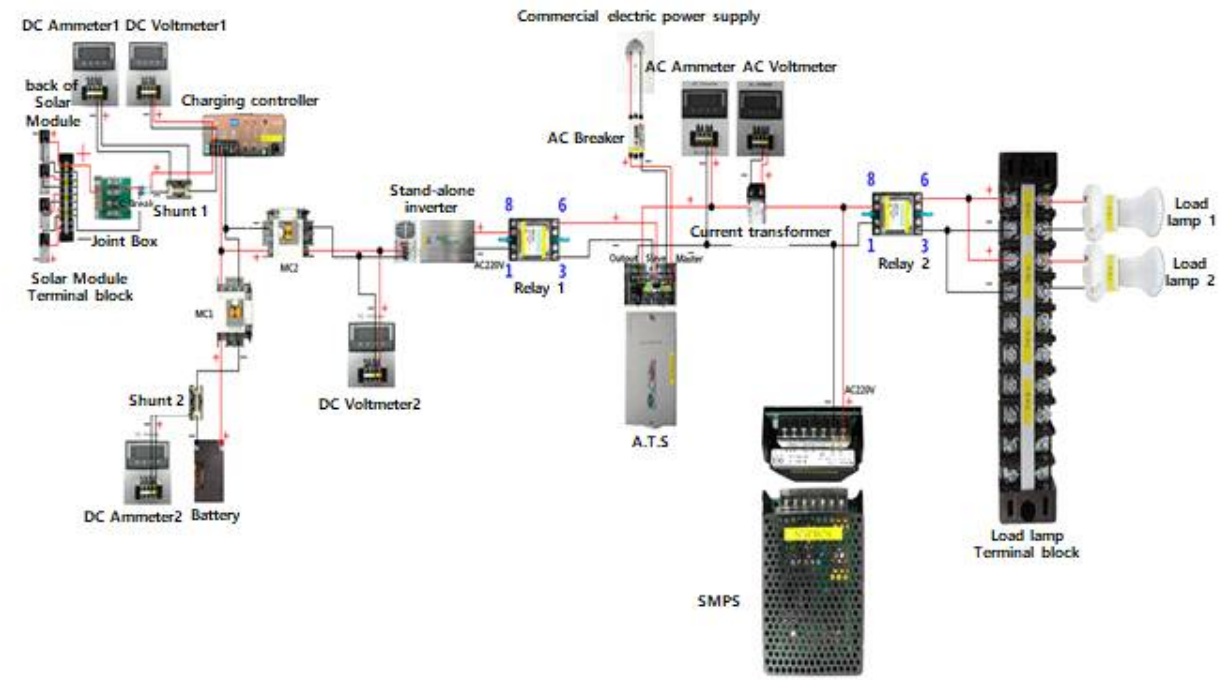

Circuit Components

Solar modules	Battery
Joint box	Stand-alone inverter
DC Breaker	AC Breaker
Charge controller	Load lamp
Automatic Transfer Switch(A.T.S)	Converter(C.T)
Shunt	AC voltmeter, AC ammeter
DC voltmeter, DC ammeter	MC, Relay

Actual wiring diagram

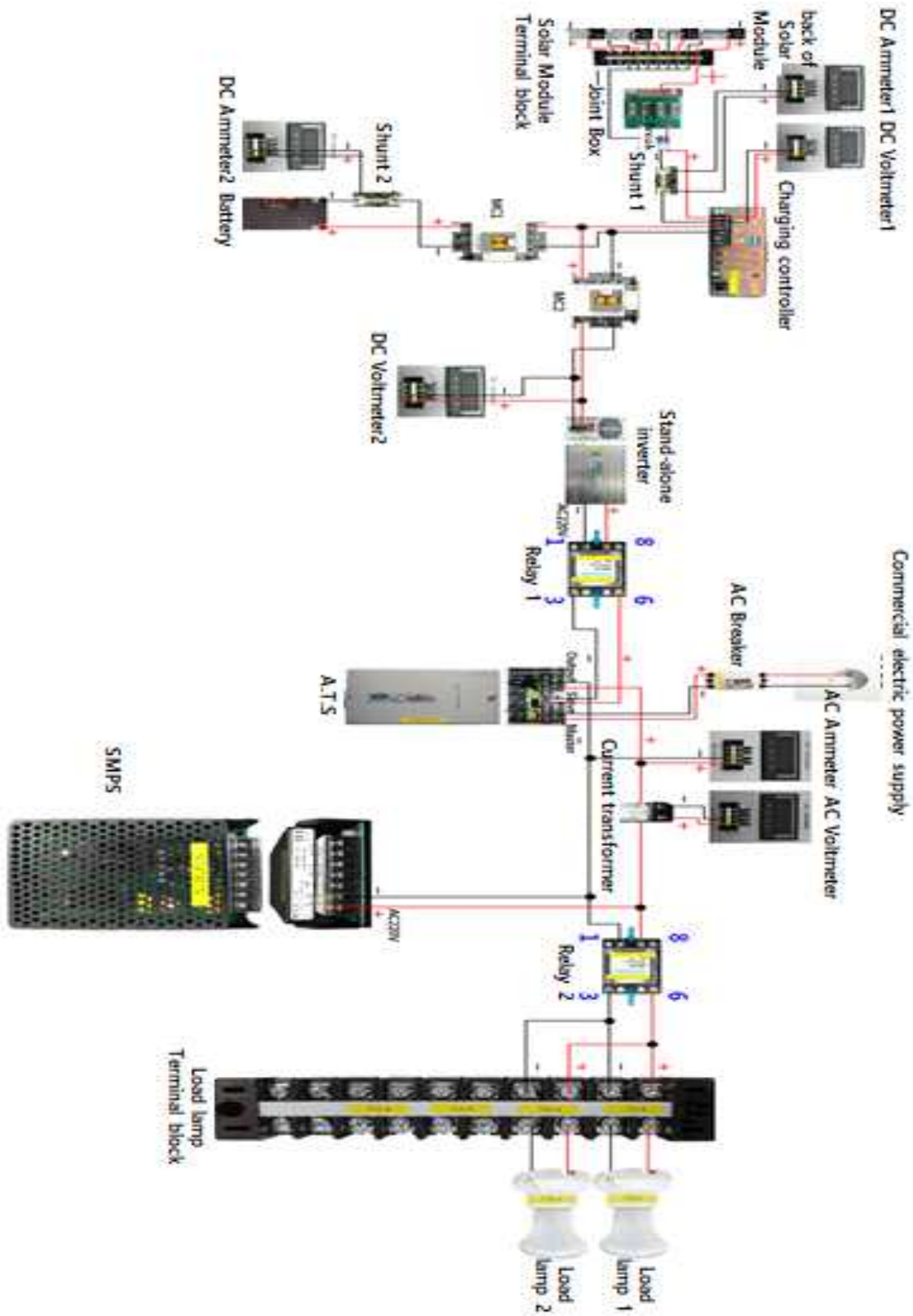

1. Load lamp Control circuit

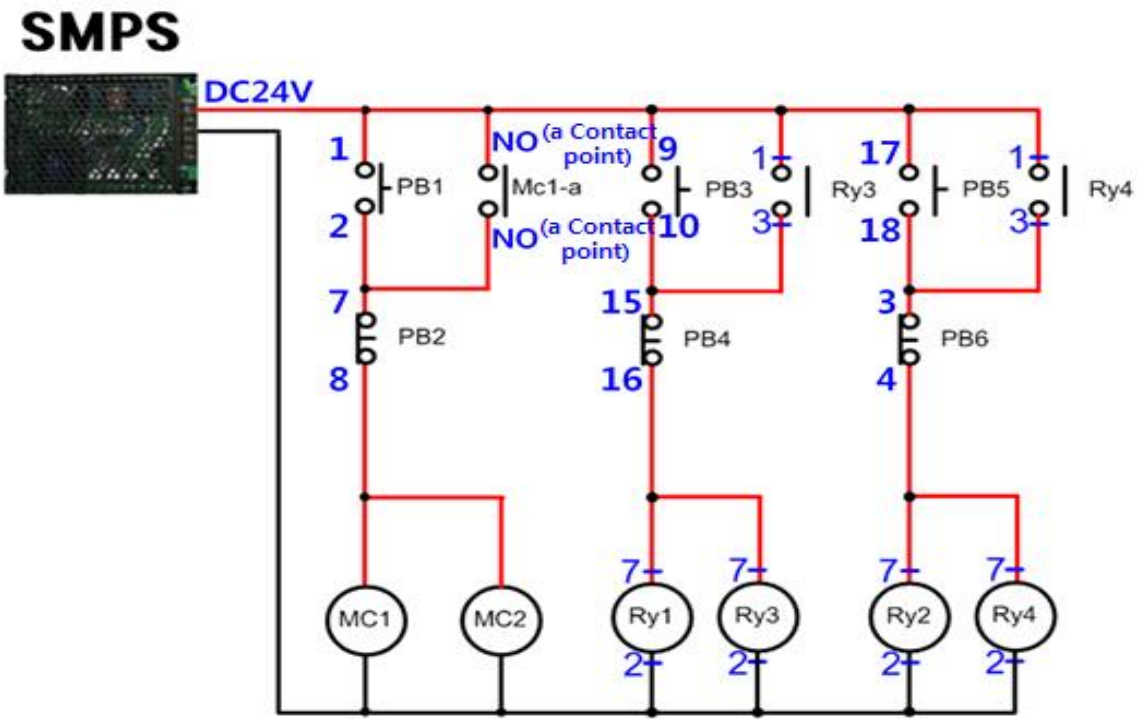

Control circuit

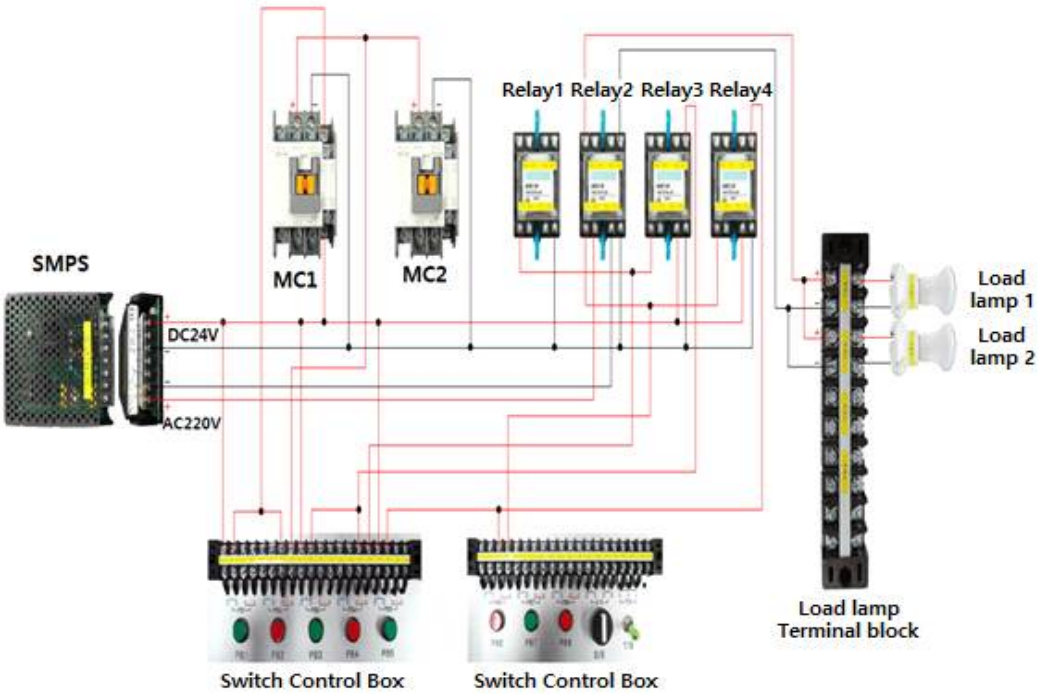

Actual wiring diagram

2. Configuration of Circuit Diagram

(1) Connect the solar cell module to connection board in series.

(2) Connect the output part of connection board and negative pole of solar cell module to input part of DC breaker.

(3) Connect positive output of DC breaker to positive input of charge controller and negative output of DC breaker to negative input of charge controller.

(4) Connect positive terminal of battery of charge controller to 'a' connective point of MC and positive pole of storage battery, and negative terminal of battery of charge controller to 'a' connective point of MC and shunt and negative pole of storage battery.

(5) Connect the positive and negative terminals of battery of charge controller to the connective point of MC and the negative and positive poles of DC input terminal of stand-alone inverter.

(6) Wire the circuit in line with control circuit 2. when connecting the AC output part of stand-alone-inverter to ATS slave.

(7) Connect the output part of AC breaker to the input terminal of ATS master.

(8) Wire the circuit in line with control circuit 1. when connecting the ATS output to load lamp through current transformer.

(9) Connect the output terminals of shunt 1 and 2 to each DC ammeter.

(10) Connect the output terminal of current transformer to AC ammeter.

(11) Connect the input parts of DC and AC volt meters in line with circuit diagram.

(12) Set the DIP switch of charge controller in line with the battery voltage.

(13) Put the switches of DC breaker and AC breaker on ON, and the lamp shall be turned on.

(14) Press PB1, and the charge controller with storage battery and the battery with inverter shall be connected, as the connective point of MC1 and MC2 is closed. Press PB3, and the inverter output shall supply the power to ATS slave. Press PB5, and the ATS output shall supply the power to load lamp.

*Note

- Identify if the switches of DC breaker and AC breaker are put on OFF before circuit wiring.
- Make sure not to cause any short-circuit to solar cell and battery.

3. Magnetic Contactor

Magnetic contactor

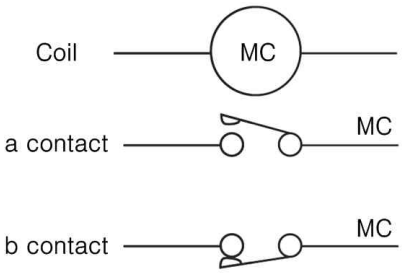

schematic

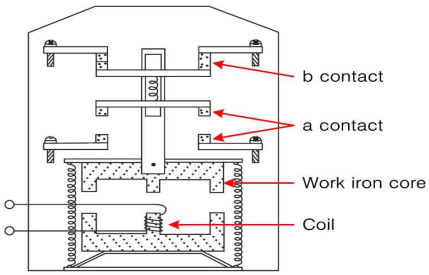

Composition

(1) The working principle of a magnetic contactor is same with a relay. In oder words the contact part is operated by absorption force of the electromagnet, usually it is used for big size current open/close of main power or start/stop control of a motor with frequently. A high pressure MC is used for open/close of a high voltage breaker. A magnetic contactor has main contact for open/close of main power, and sub-contact for small power.

Solar Power Generation Practice Experiment Equipment (KTE-7000ISG)

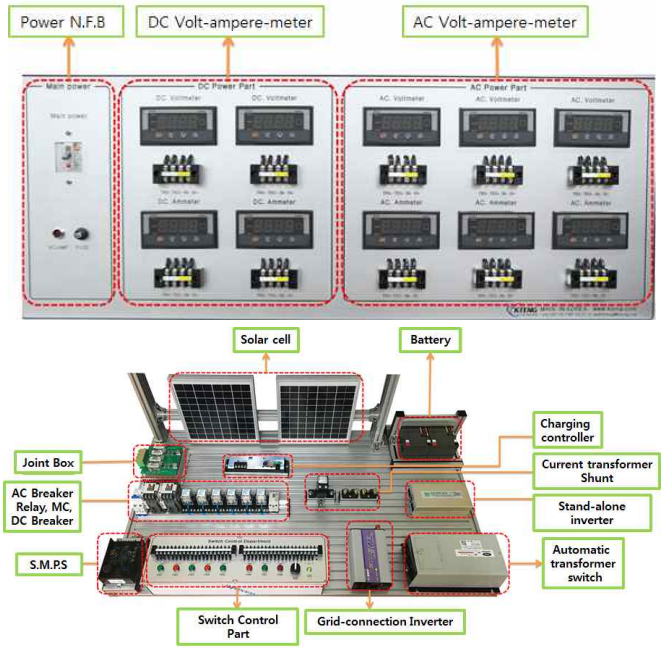

Control Panel and Parts Layout

· Requirement

1. Prepare and check the test devices, tools and materials.
2. Purpose and effect of battery connection can be explained.
3. To understand the functions of each component
4. To understand and explain the features of MC and THR.
5. To understand and explain circuit diagram.
6. To distinguish and explain DC and AC voltage control units.

Valuation Basis	Evaluation Item		Allot	Obtain	Remarks			
	Item point (70)	Configuration Circuit and operation	20					
		Real wiring circuit configuration	20					
		Configuration state	10					
		Understanding and description for circuit	20					
	Work point (10)	Work attitude and safe	5					
		Usage and arrangement of tool	5					
	Time point (20)	Subtract ( ) point in every ( ) minute excess			Item	Work	Time	Total

Experiment name	6. Practice of Configuration of Grid-connected Inverter System	Time Required
		8

The Object of Experiment	① To configure the grid-connected inverter system. ② To understand the operating principles of and to set up the grid-connected inverter system. ③ To execute the real wiring after viewing the given circuit diagram.

Experiment Equipment	Tools and Materials	Spec of Tools	Quantity
· Solar Power Generation Practice Experiment Equipment (KTE-7000ISG)	· Screw driver set · Nipper · Wire Stripper · Hook Meter	· #2× 6× 175㎜ · 150㎜ · 0.5~6㎟ · 300A 600V	1 1 1 group1

Control Circuit

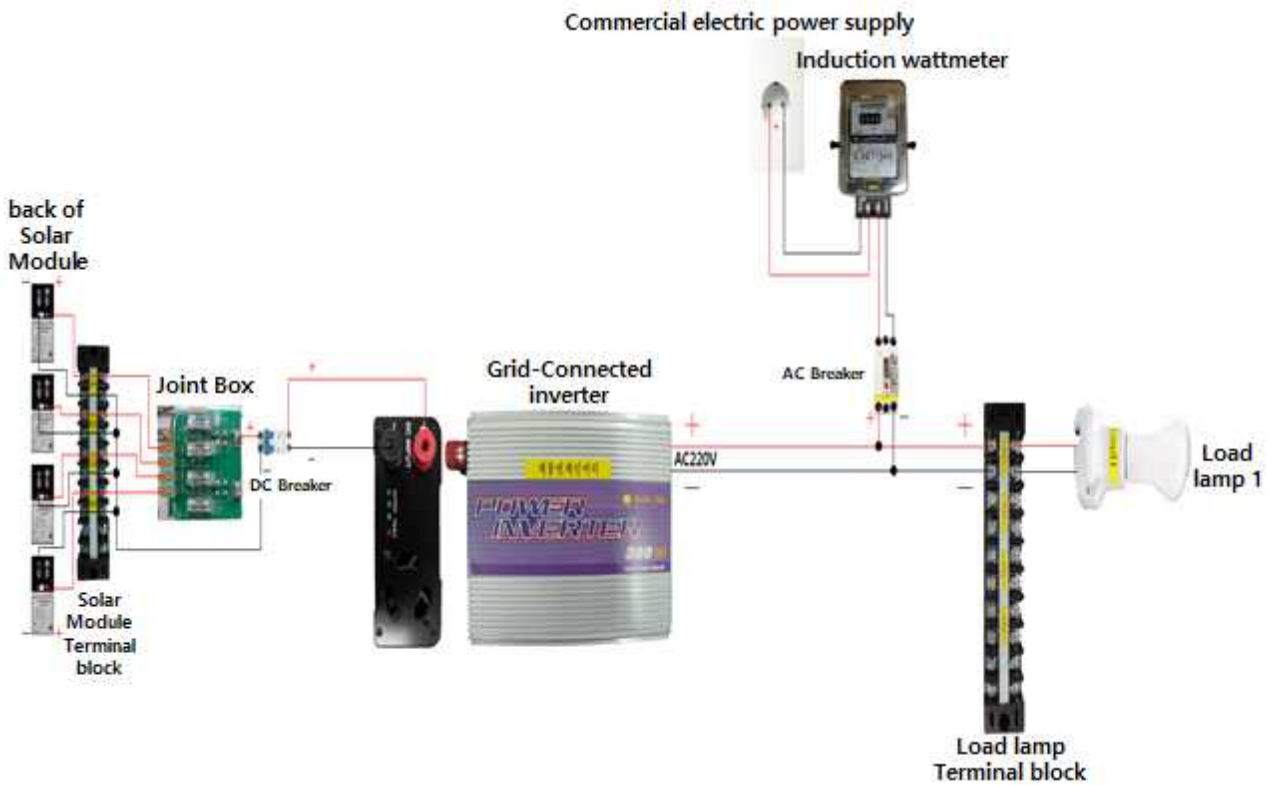

Circuit Components

Solar modules	Joint box
DC Breaker	Grid Connected Inverter
AC Breaker	Virtual DC power supply
Induction wattmeter	

Actual wiring diagram

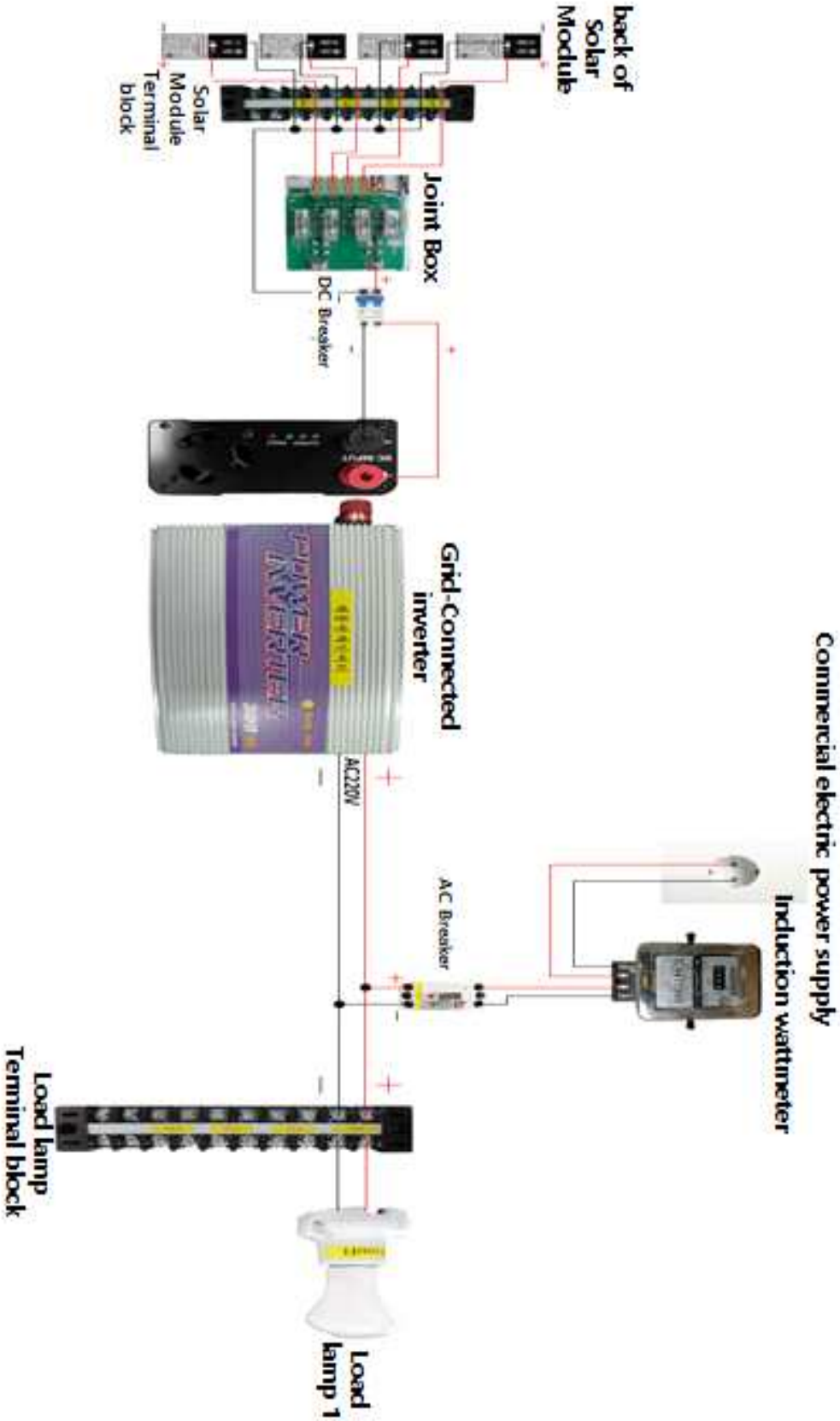

1. Configuration of Circuit Diagram

(1) Connect the solar cell module to connection board in parallel.

(2) Connect the output part of connection board and negative pole of solar cell module to input part of DC breaker.

(3) Connect the output part of DC breaker to the DC input part of grid-connected inverter.

(4) Connect the AC output part of grid-connected inverter to the AC breaker.

(5) Put the switches of DC breaker and AC breaker on ON, and the power shall be generated.

*Note

- Use the DC supply device to connect to connection board instead of solar cell module as it is impossible to get the DC operating voltage of grid-connected inverter, if such experiment is made indoors.
- Identify if the switches of DC breaker and AC breaker are put on OFF before circuit wiring.
- Connect the solar cell module and grid-connected inverter with special attention to positive and negative poles.

2. Grid-connected Inverter

(1) What is Grid-connected Inverter? It refers to a system which is connected with the grid of normal power source to supply power to the load and the rest to the grid.

(2) The hardware of grid-connected inverter comprises an input part which is designed to safely receive DC power from solar cell module, a power conversion part which converts DC to AC voltage, a transformer which transforms the size of electric heat or voltage, a grid-connected part which safely supplies the power to the grid line, a main control panel which controls each part of device, a senor and relay panel which generates output of connection point for detection and protection of various signals, a auxiliary power which is designed to supply DC power required for system, and a display and a keypad which are designed to set and control various indications.

(3) Grid-connected inverter system is, as opposed to stand-alone inverter, a system which does not use battery but exploits an inverter to supply power to the load and the rest to the grid, which saves substantial battery and maintenance expenses.

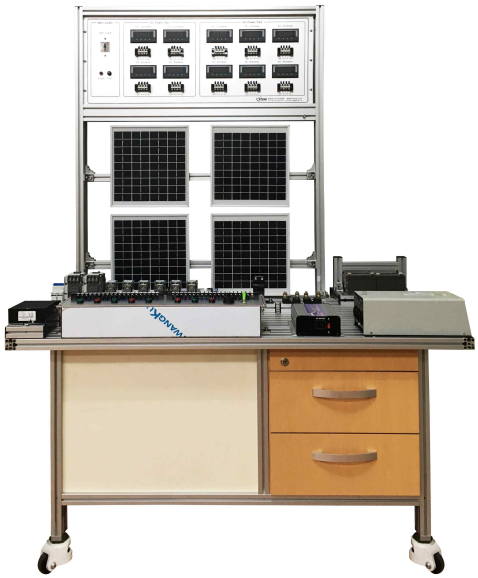

Solar Power Generation Practice Experiment Equipment (KTE-7000ISG)

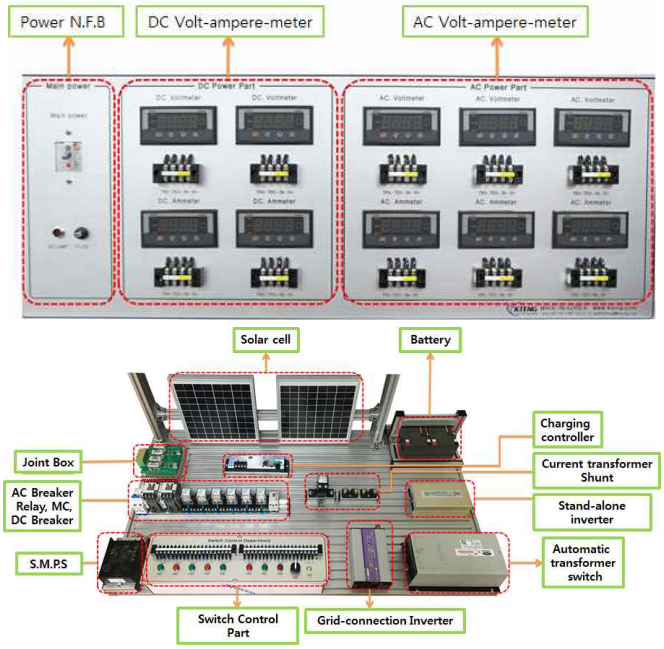

Control Panel and Parts Layout

· Requirement

1. Prepare and check the test devices, tools and materials.
2. Purpose and effect of battery connection can be explained.
3. To understand the functions of each component
4. To understand the operation of grid-connected inverter.
5. To understand the grid-connected inverter system and distinguish between DC and AC.

Valuation Basis	Evaluation Item		Allot	Obtain	Remarks			
	Item point (70)	Configuration Circuit and operation	20					
		Real wiring circuit configuration	20					
		Configuration state	10					
		Understanding and description for circuit	20					
	Work point (10)	Work attitude and safe	5					
		Usage and arrangement of tool	5					
	Time point (20)	Subtract ( ) point in every ( ) minute excess			Item	Work	Time	Total

Experiment name	7. Practice of Configuration and Load Control of Grid-connected Inverter System	Time Required
		8

The Object of Experiment	
	① To configure the grid-connected inverter system. ② To understand the operating principles of and to set up the grid-connected inverter system. ③ To execute the real wiring after viewing the given circuit diagram.

Experiment Equipment	Tools and Materials	Spec of Tools	Quantity
· Solar Power Generation Practice Experiment Equipment (KTE-7000ISG)	· Screw driver set · Nipper · Wire Stripper · Hook Meter	· #2× 6× 175㎜ · 150㎜ · 0.5~6㎟ · 300A 600V	1 1 1 group1

Control Circuit

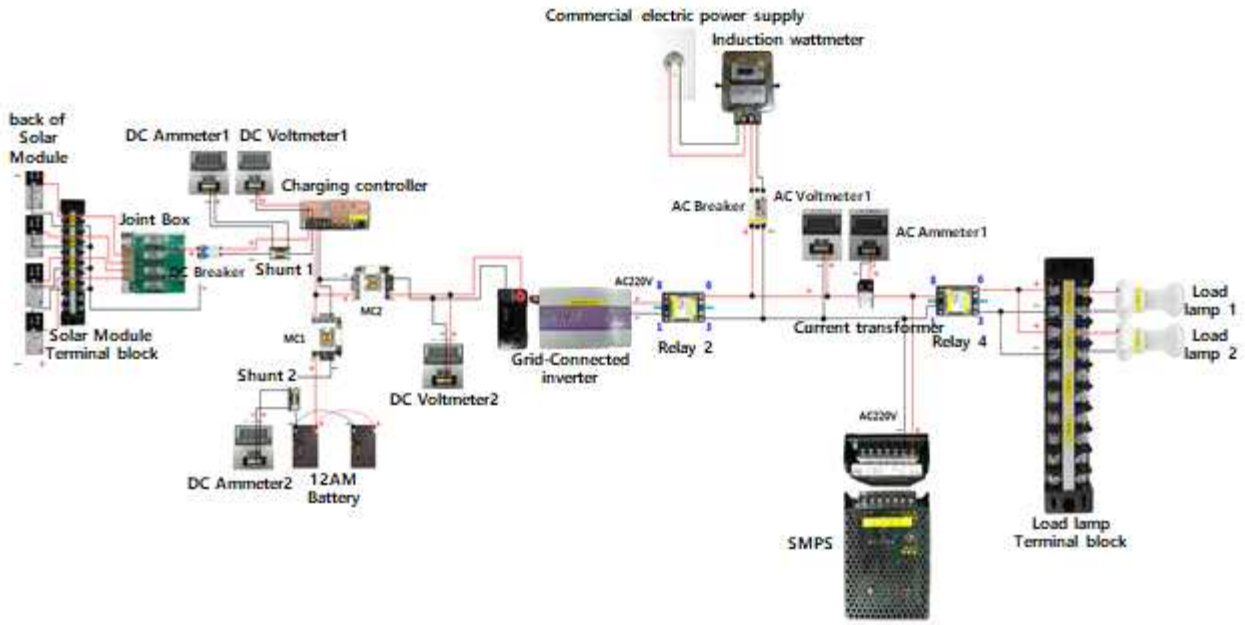

Circuit Components

Solar modules	Battery
Joint box	Grid Connected Inverter
DC Breaker	AC Breaker
Shunt	Load lamp
DC voltmeter, DC ammeter	converter(C.T)
Virtual DC power supply	AC voltmeter, AC ammeter
Power meter	Relay

Actual wiring diagram

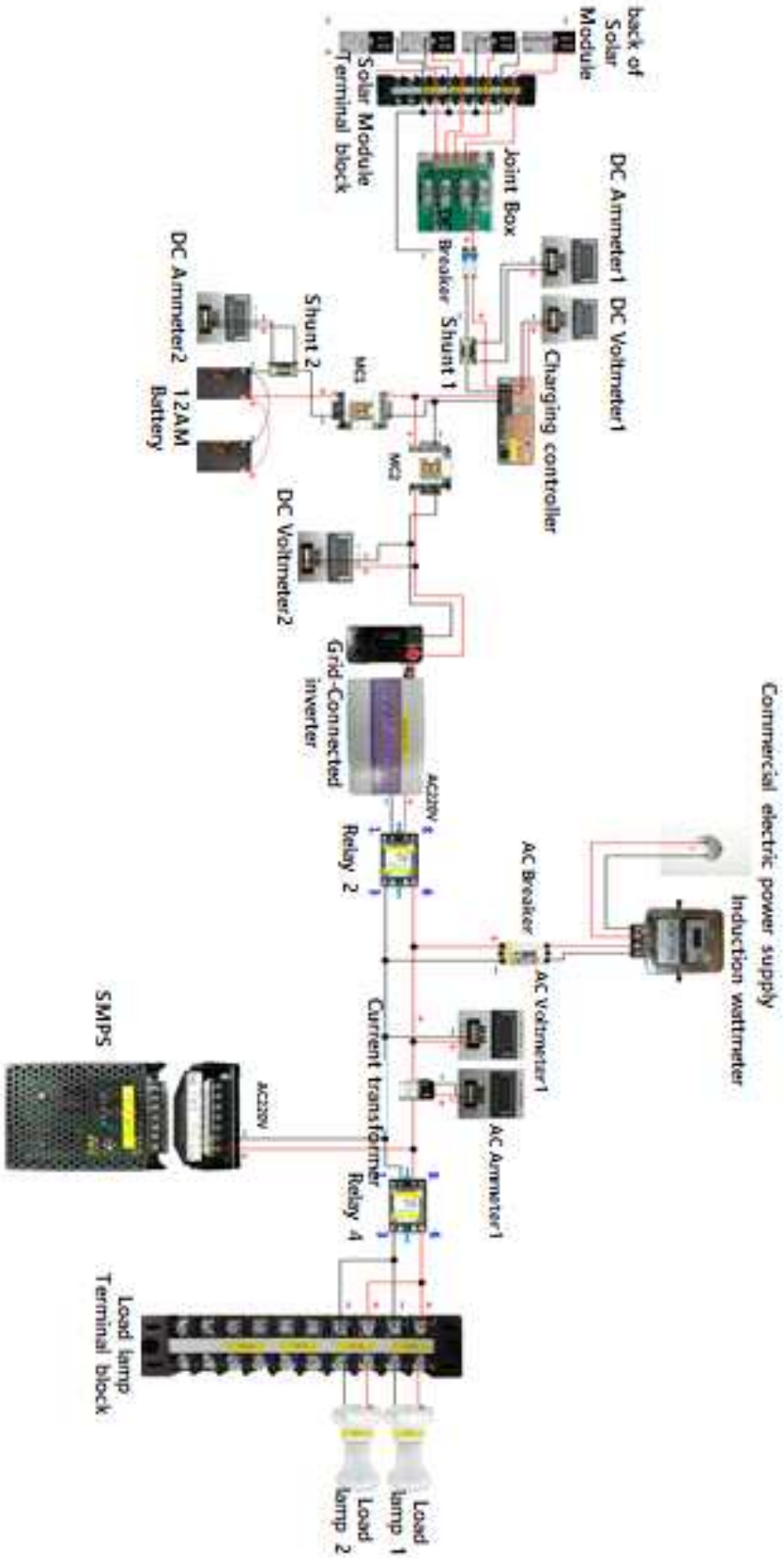

1. Control Circuit Diagram of Load Lamp

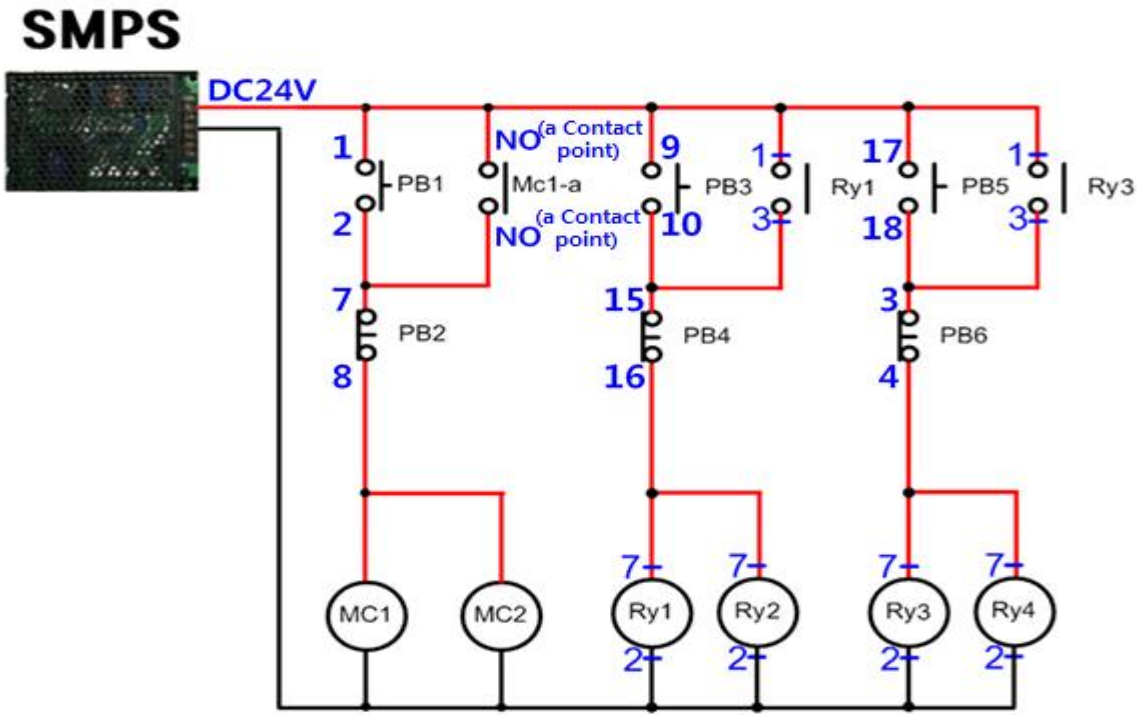

Control Circuit

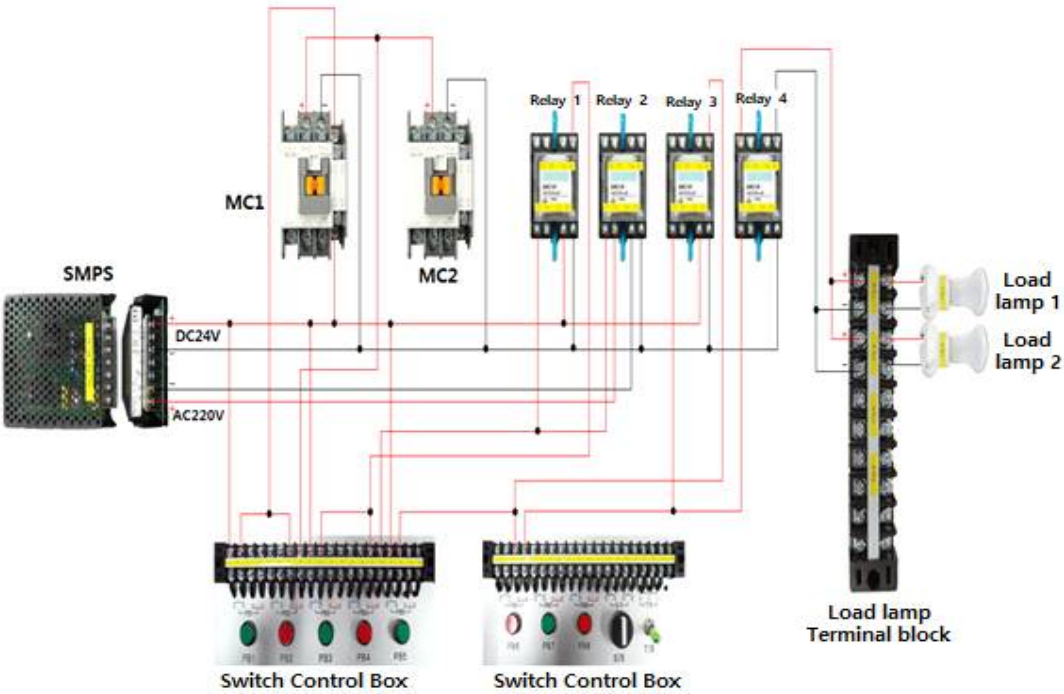

Actual wiring diagram

2. Configuration of Circuit Diagram

(1) Connect the solar cell module to connection board in parallel.

(2) Connect the output part of connection board and negative pole of solar cell module to input part of DC breaker.

(3) Connect the positive output part of DC breaker to the positive input part of grid-connected inverter, and the negative output part of DC breaker to shunt and negative input part of grid-connected inverter.

(4) Connect the AC output part of grid-connected inverter to the load lamp through the shunt, and wire a control circuit viewing the control circuit 1.

(5) Connect the power of SMPS viewing the circuit diagram.

(6) Connect the AC output part of grid-connected inverter to the output part of AC breaker.

(7) Connect the input part of AC breaker to the output part of watt-hour meter.

(8) Connect the output signal terminal of shunt 1 to the DC ammeter.

(9) Connect the output signal terminal of current transformer to the AC ammeter.

(10) Connect the input parts of DC and AC volt meters in line with circuit diagram.

(11) Connect the main power to the input part of watt-hour meter.

*Note

- Use the DC supply device to connect to connection board instead of solar cell module as it is impossible to get the DC operating voltage of grid-connected inverter, if such experiment is made indoors.
- Identify if the switches of DC breaker and AC breaker are put on OFF before circuit wiring.
- Connect the solar cell module and grid-connected inverter with special attention to positive and negative poles.
- Connect the cable of main power after the whole circuit wiring is completed.

Solar Power Generation Practice Experiment Equipment (KTE-7000ISG)

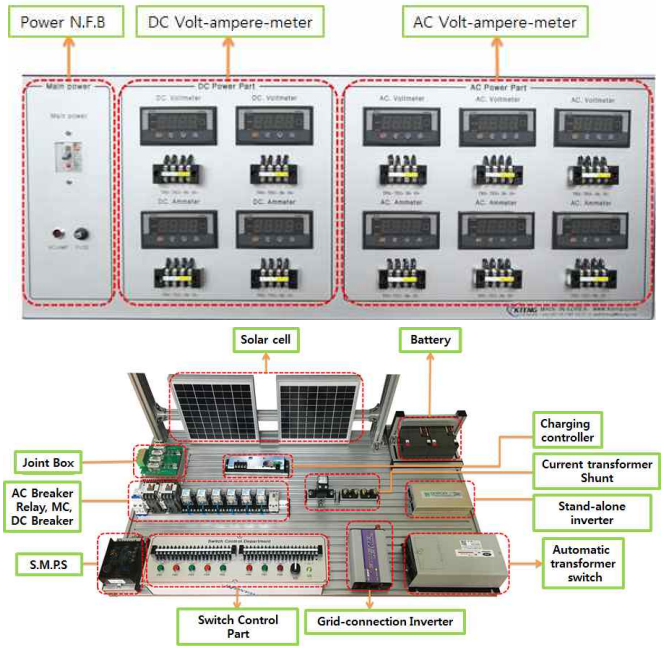

Control Panel and Parts Layout

· Requirement

1. Prepare and check the test devices, tools and materials.
2. Purpose and effect of battery connection can be explained.
3. To understand the functions of each component
4. To understand the operation of grid-connected inverter.
5. To understand the grid-connected inverter system, and to configure load control circuit.

Valuation Basis	Evaluation Item		Allot	Obtain	Remarks			
	Item point (70)	Configuration Circuit and operation	20					
		Real wiring circuit configuration	20					
		Configuration state	10					
		Understanding and description for circuit	20					
	Work point (10)	Work attitude and safe	5					
		Usage and arrangement of tool	5					
	Time point (20)	Subtract ( ) point in every ( ) minute excess			Item	Work	Time	Total

4. Troubleshooting and countermeasure

4-1. When power is not supplied.

(1) If power is not supplied when turn on NFB, check that power code on back side of NFB is connected to outlet or power input.

4-2. Errors occur in other components

(1) If errors occur in other components, plesae contact a a/s center.

4-3. Overall items

(1) Recommended to read user manual for safety operation of equipment.
(2) If user modify or disassemble the equipment arbitrarily, repair cost will be charged despite the term of guarantee.
(3) If user has any question, feel free to contact KTENG. All staff of KTENG will help as far as.

◎ Certificate of Patent

CERTIFICATE OF PATENT

PATENT NUMBER 10-0952929

APPLICATION NUMBER 2009-0103301
FILING DATE Oct. 29. 2009
REGISTRATION DATE Apr. 07. 2010

TITLE OF THE INVENTION Complex Power Conversion Equipment

PATENTEE KTENG Co. Ltd., (141111-0******)
601 Postechno B/D 234-1 Sangdaewon-dong Jungwon-gu
Seongnam-si Gyeonggi-do Korea

INVENTOR Kim, Chul Su
122-701 Jangan town Kunyoung Apt., Bundang-dong
Bundang-gu Seongnam-si Gyeonggi-do Korea

THIS IS TO CERTIFY THAT THE PATENT IS REGISTERED ON THE REGISTER OF THE KOREAN INTELLECTUAL PROPERTY OFFICE

Apr. 07. 2010

COMMISSIONER,
THE KOREAN INTELLECTUAL PROPERTY OFFICE

CERTIFICATE OF UTILITY MODEL REGISTRATION

REGISTRATION NUMBER 20-0449478

APPLICATION NUMBER 2009-0014127
FILING DATE Oct. 30. 2009
REGISTRATION DATE Jul. 06. 2010

TITLE OF THE DEVICE Artificial Sunlight Equipment

OWNER OF THE UTILITY MODEL RIGHT
KTENG Co. Ltd., (141111-0******)
601 Postechno B/D 234-1 Sangdaewon-dong Jungwon-gu
Seongnam-si Gyeonggi-do Korea

DEVISER
Kim, Chul Su
122-701 Jangan town Kunyoung Apt., Bundang-dong
Bundang-gu Seongnam-si Gyeonggi-do Korea

THIS IS TO CERTIFY THAT THE DESIGN IS REGISTERED ON THE REGISTER OF THE KOREAN INTELLECTUAL PROPERTY OFFICE

Oct. 25. 2010

COMMISSIONER,
THE KOREAN INTELLECTUAL PROPERTY OFFICE

CERTIFICATE OF UTILITY MODEL REGISTRATION

REGISTRATION NUMBER 20-0447670

APPLICATION NUMBER 2009-0008945
FILING DATE Jul. 10. 2009
REGISTRATION DATE Feb. 03. 2010

TITLE OF THE DEVICE Educational Energy Collection Equipment

OWNER OF THE UTILITY MODEL RIGHT
KTENG Co. Ltd., (141111-0******)
601 Postechno B/D 234-1 Sangdaewon-dong Jungwon-gu
Seongnam-si Gyeonggi-do Korea

DEVISER
Kim, Chul Su
122-701 Jangan town Kunyoung Apt., Bundang-dong
Bundang-gu Seongnam-si Gyeonggi-do Korea

THIS IS TO CERTIFY THAT THE DESIGN IS REGISTERED ON THE REGISTER OF THE KOREAN INTELLECTUAL PROPERTY OFFICE

Feb. 03. 2010

COMMISSIONER,
THE KOREAN INTELLECTUAL PROPERTY OFFICE

NO. C-2009-000406

COPYRIGHT REGISTRATION

1.Work Title	Renewable Energy Automatic Control Work
2. Work Type	Literature
3. Register name	KTENG Co.,Ltd.
4. Corporate company registration No.	141111-0019270
5. Copyright owner	
6. Corporate company No.	
7. Creative date	Dec. 30. 2009
8. Announce date	
9. Reference	Owner : KTENG Co.,Ltd. Creative July. 14. 2008
10. Registration date	Dec. 30. 2009

This has been registered with regarding as article 53 in the law of copyright.

Jan. 08. 2010

COPYRIGHT COMMITTEE

◎ Warrantee and A/S application sheet

Product Warrantee Certification

Fill out this sheet, and send by Fax or E-mail..

MODEL		
WARRENTEE TERM	1 YEAR	
PURCHASING DATE	(M/D/Y)	
ORGANIZATION	**SCHOOL**	
	DEPARTMENT	

Headquarters :679-7 2Fl Sinhyun-Li, Opo-Eup, Gwangju-City, Gyonggi-Do, KOREA (zip : 464-895)
Head Office : #133-1 Sinhyun-li, Opo-eup, Gwangju-City, Gyeonggi-Do KOREA (zip : 464-895)
TEL : +81-31-749-5373 | FAX : +81-31-749-5376 | kteng@kteng.com| www.kteng.com